Rad hard P-channel FETs: a simpler & more reliable solution for space PMAD designs

Oscar Mansilla, Rushi Patel & Michelle Lozada
April 2023

IOR HiRel
An Infineon Technologies Company

Representing IR HiRel, an Infineon Technologies company



Oscar Mansilla
oscar.mansilla@infineon.com
Product Marketing Director, Space

Copyright © International Rectifier HiRel Products, Inc. 2023. All rights reserved.

MOSFETs are critical to PMAD reliability



- Overall system reliability remains crucial in space applications.
  - This is especially true for the power management and distribution (PMAD) needed to keep spacecraft operational
- With space systems only as capable as their weakest parts, reliability starts at the discrete component level
  - This includes power MOSFETs used in power converter, power stages and power distribution

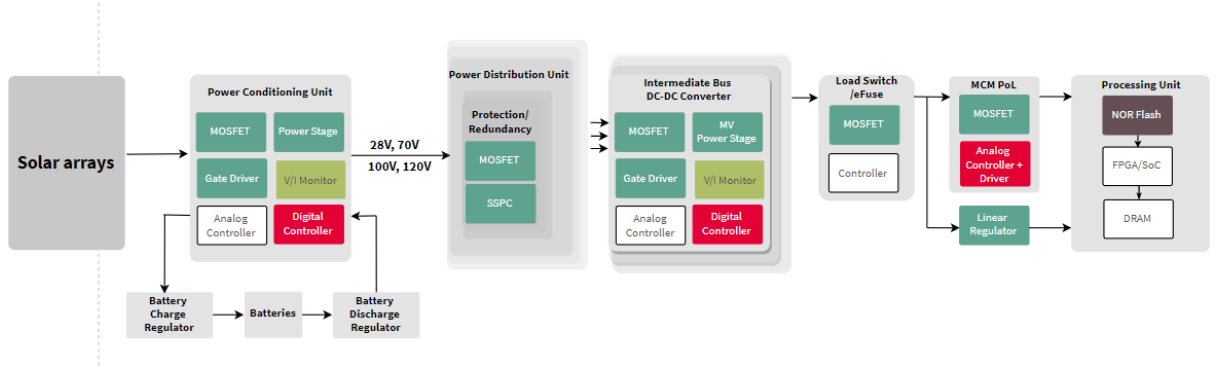

Copyright © International Rectifier HiRel Products, Inc. 2023. All rights reserved.

Latest generation rad hard power solutions improve system efficiency

- For a typical satellite, the mix of power FETs needed is approximately 60% N-channel and 40% P-channel

Applications ideal for P-channel MOSFETs include

- **Load switching**
- **Load sequencing**
- **Redundancy for power sources and loads**
- **Inrush current limiting**

- Better $R_{DS(ON)}$ and SOA performance of IR HiRel's latest generation R9 rad hard P-channel devices may allow some PMAD applications to move away from using N-channel MOSFETS and take advantage of the simpler gate drive requirements of P-channel MOSFETs

Copyright © International Rectifier HiRel Products, Inc. 2023. All rights reserved.

SOA improvements increase power capability by 250%

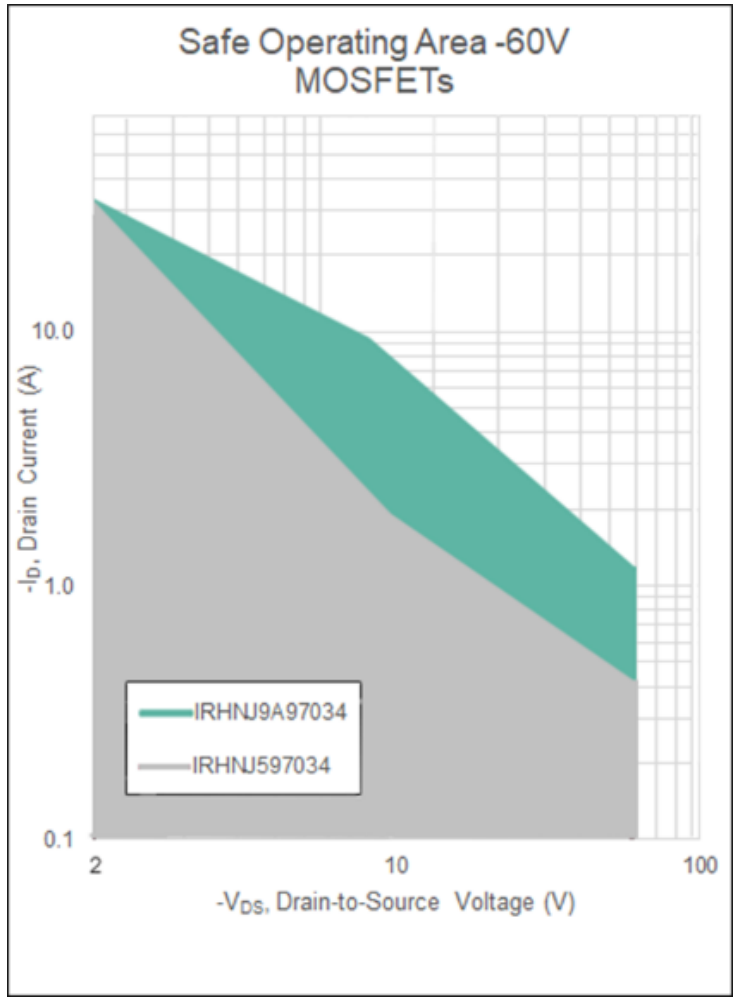

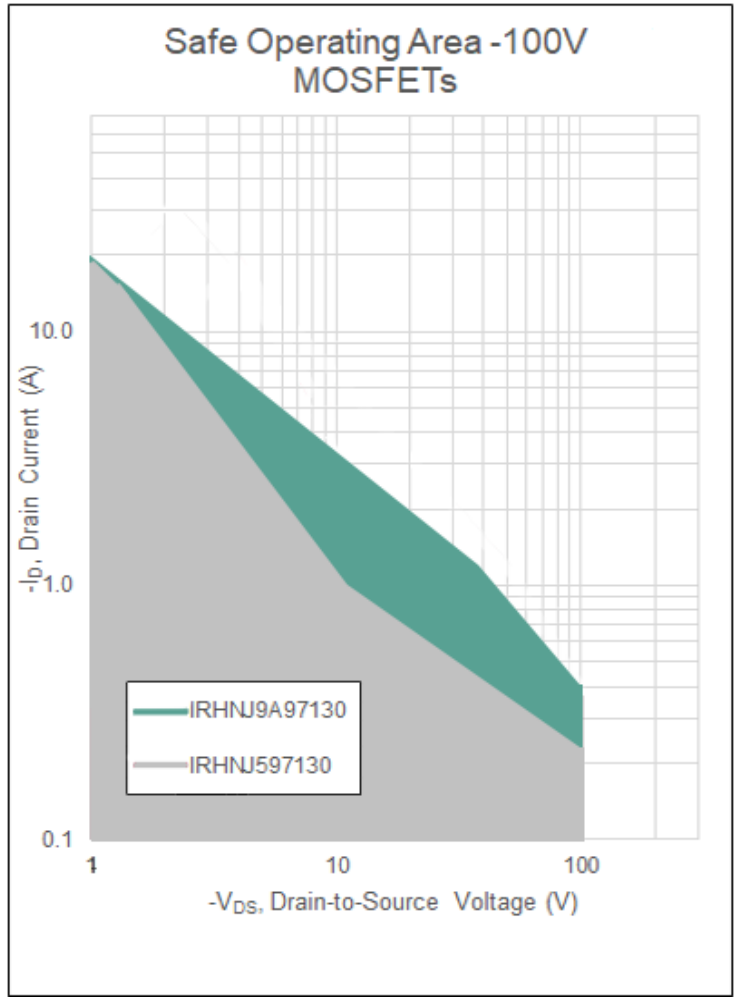

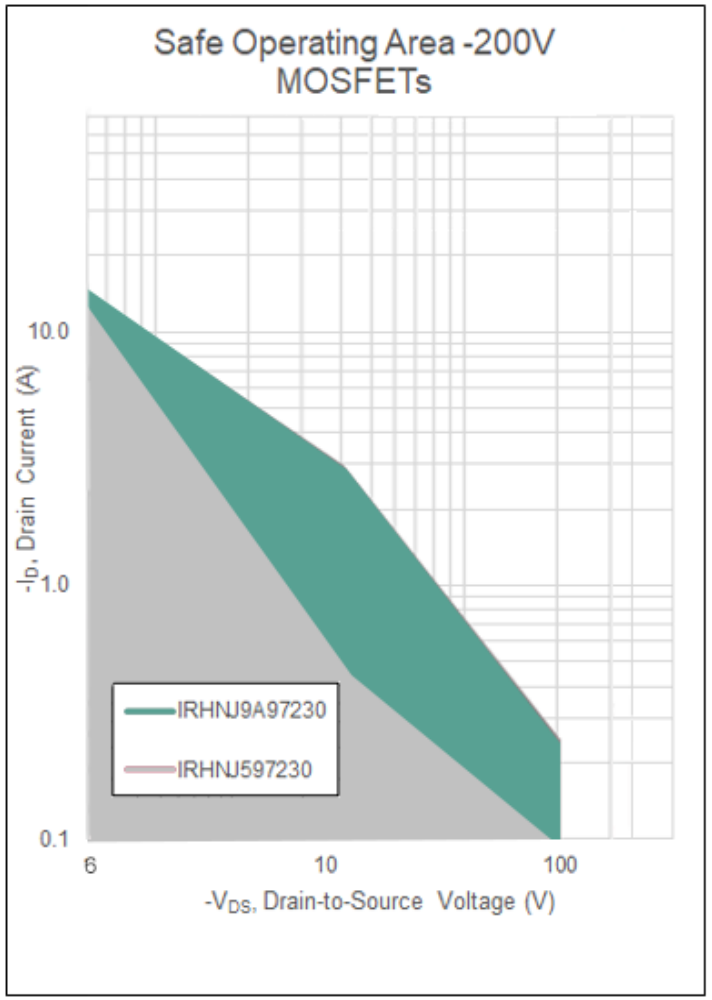

IR HiRel's R9 P-channel MOSFETs expand the envelope for DC safe operating area when compared with the company's legacy R5 devices. Three voltage classes of R9 and R5 MOSFETs are compared here.

Copyright © International Rectifier HiRel Products, Inc. 2023. All rights reserved.

R9 60 V P-channel devices have 3x higher current capability

R5 60 V P-channel MOSFET (IRHYS597034CM)

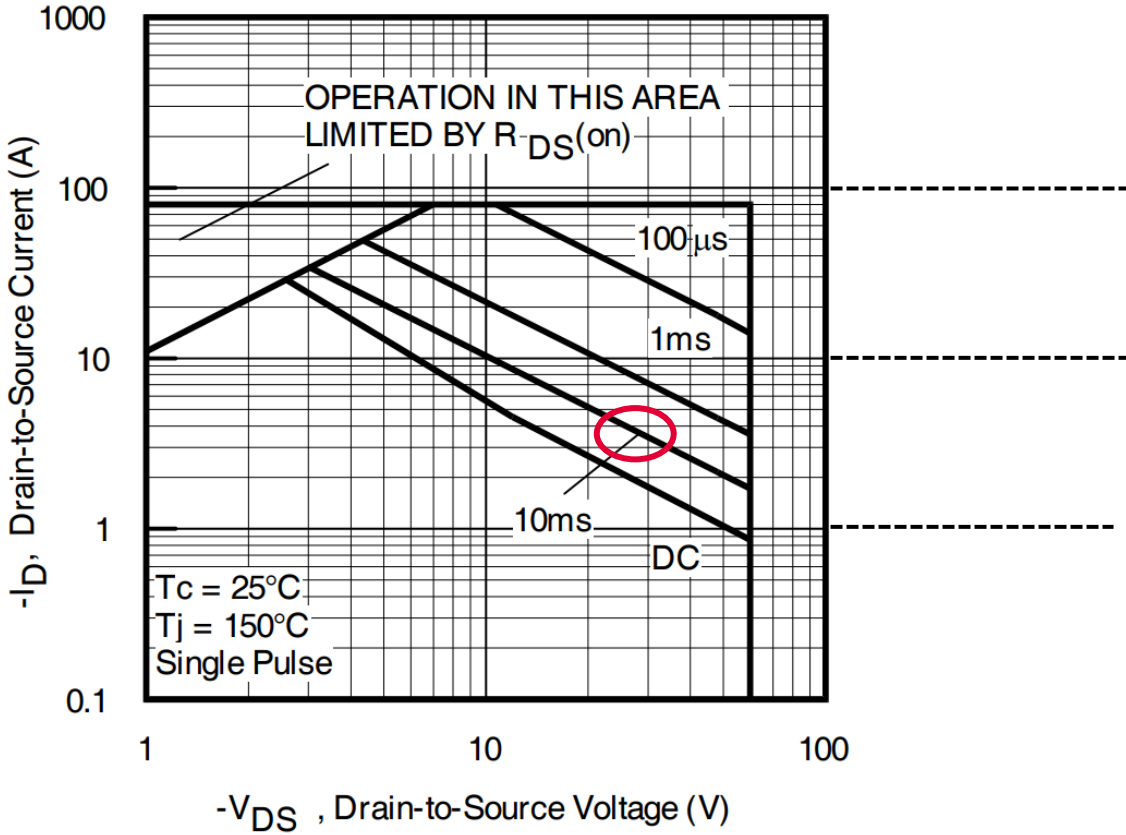

R9 60 V P-channel MOSFET (IRHYS9A97034CM)

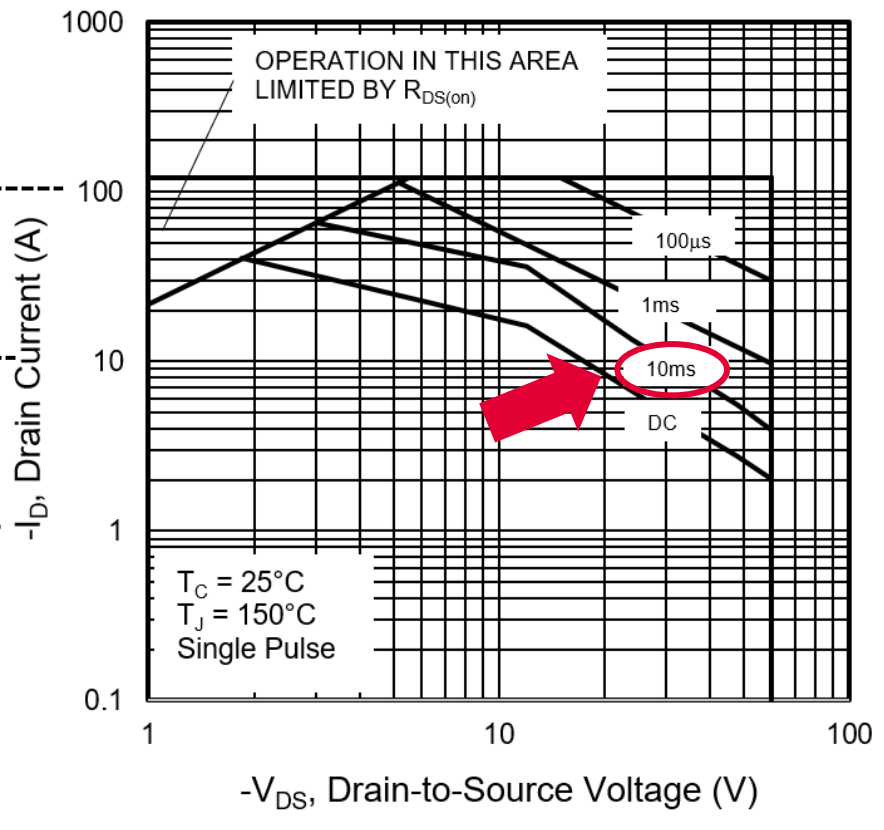

As T_a increases, inrush current peak is to be reduced

→ **Comparing the SOA of an R5 60 V P-channel MOSFET (IRHYS597034CM on left) with that of an R9 60 V P-channel MOSFET (IRHYS9A97034CM on right). The R9 device has 250% higher current capability.**

Copyright © International Rectifier HiRel Products, Inc. 2023. All rights reserved.

Simplify gate driving with P-channel FETs

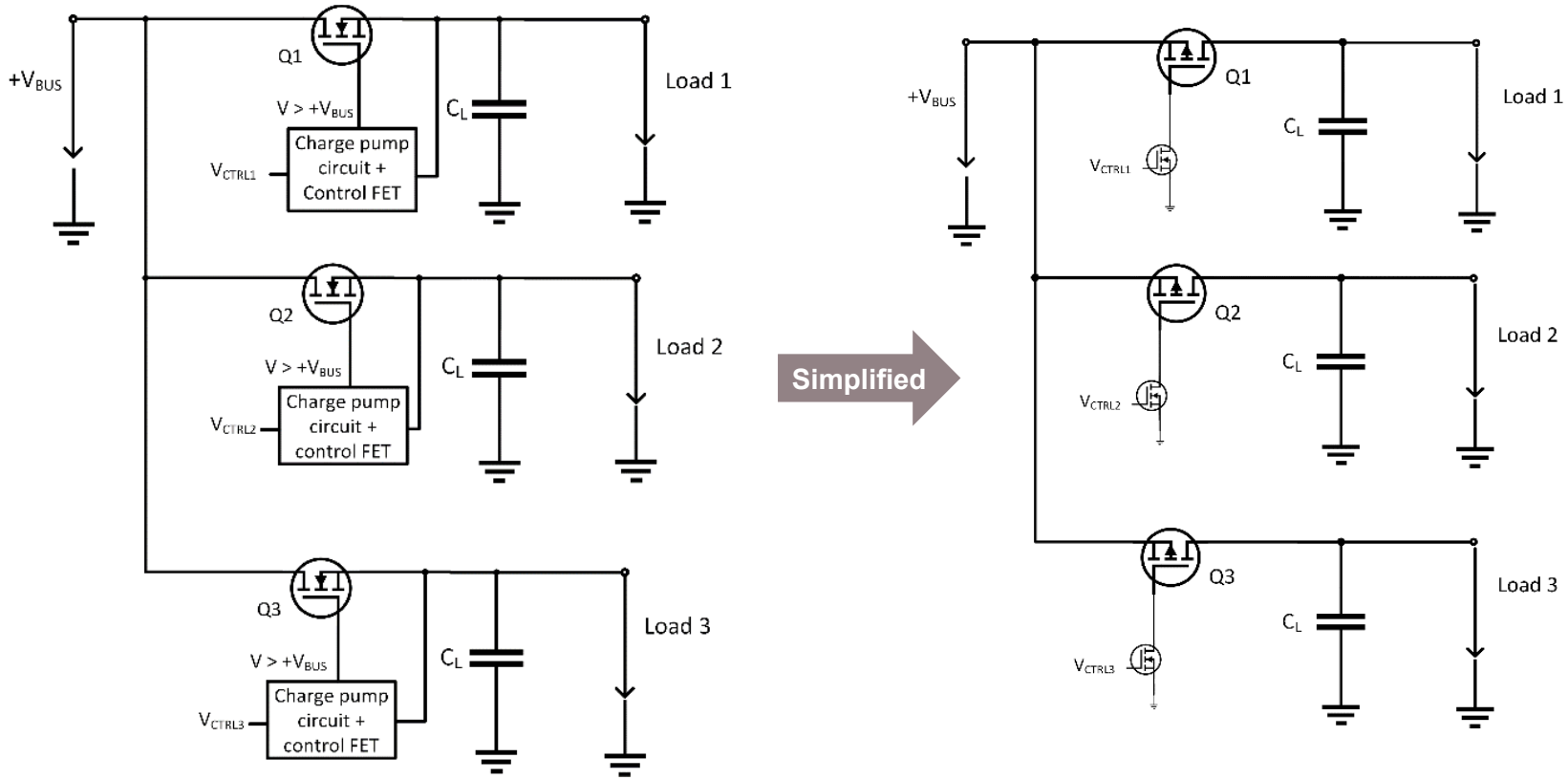

Benefits of coupling the simpler gate driver with low $R_{DS(ON)}$ performance:

- increases system efficiency
- reduces design complexity
- decreases overall system cost

Simplified gate driving with P-channel (right) versus N-channel MOSFETs in a load sequencing circuit (left).

Copyright © International Rectifier HiRel Products, Inc. 2023. All rights reserved.

Save time and board space with P-channel devices

Typical inrush current limiter implementation

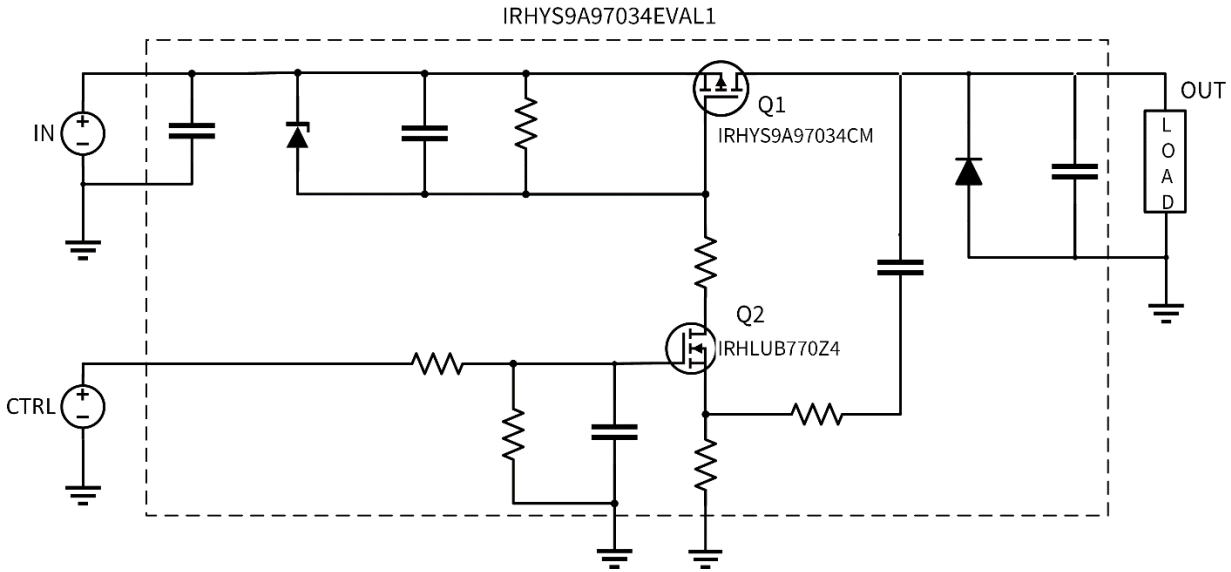

Inrush current limiter evaluation board using the IRHYS9A97034CM and IRHLUB770Z4



High side implementation	Benefits	Tradeoffs
N-channel	Lower $R_{DS(ON)}$	More complex design Larger board footprint Higher system cost
Latest gen R9 P-channel with improved FoM, SOA and $R_{DS(ON)}$	Simplified design Higher efficiency, reliability Board space savings Lower system cost	Higher $R_{DS(ON)}$

Copyright © International Rectifier HiRel Products, Inc. 2023. All rights reserved.

R9 devices support higher power dissipation in linear mode

Inrush current

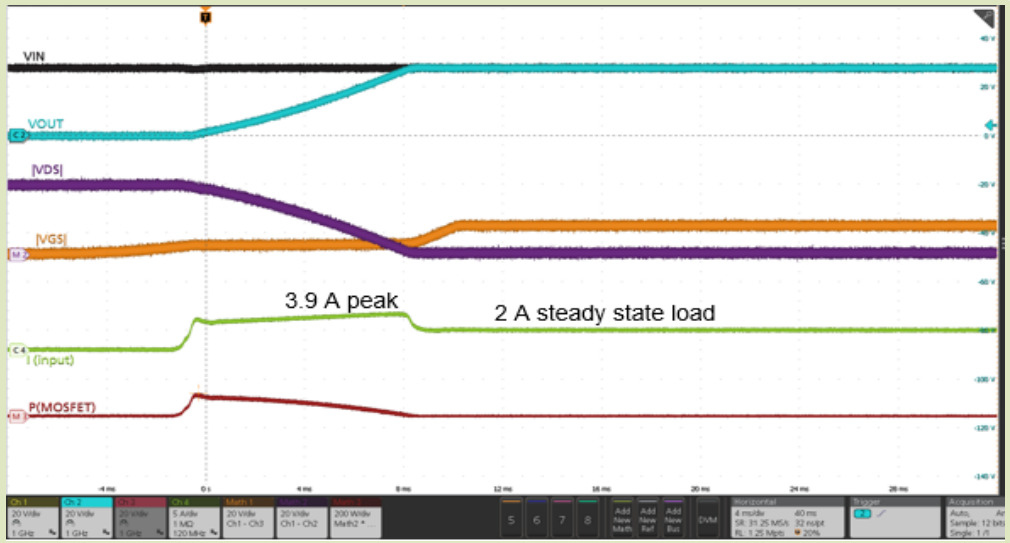

R5 SOA performance in the TO-257AA package limits use to <50-W converters in inrush current limiting applications.

R9 performance in the same package can support >100 W of power dissipation in inrush current limiting applications.

Inrush current

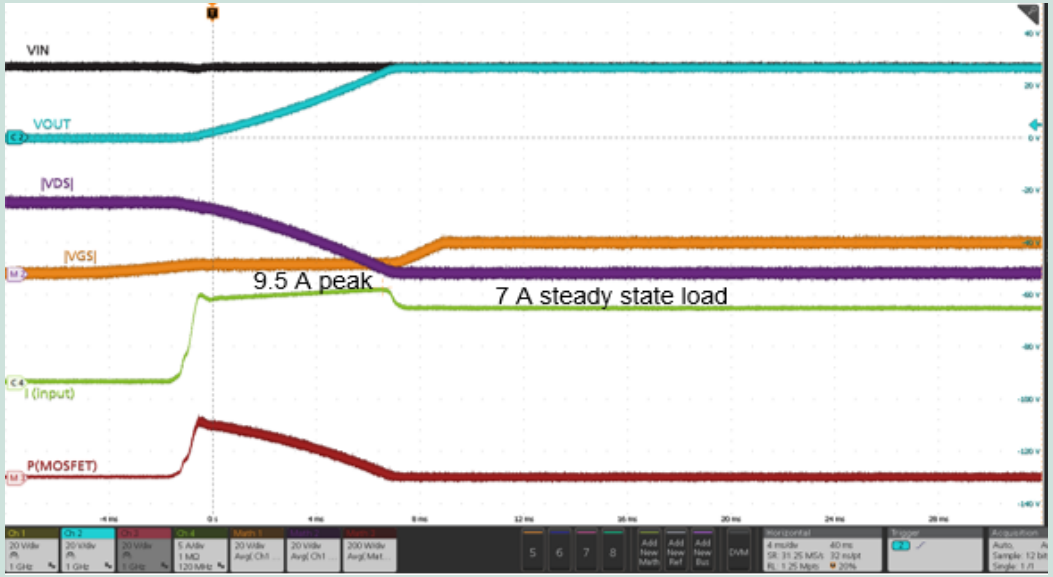

Copyright © International Rectifier HiRel Products, Inc. 2023. All rights reserved.

R9 rad hard MOSFET technology platform

- Improved SEE radiation performance
- Increase power density and higher efficiency
- Drop-in replacement for existing MOSFET
- Smaller footprint and lower mass with innovative packaging

N-channel platform

Size \ Volt	60V	100V	250V
6	✓	✓	✓
3	✓	✓	✓
1.7	✓	✓	✓
1	✓	✓	✓

P-channel platform

Size \ Volt	60V	100V	200V
6	✓	✓	✓
3	✓	✓	✓

✓ fully released
✓ development

Features

- Increased I_D capability
- Lower $R_{DS(on)}$
- TID levels – 100krad and 300krad
- SEE tolerant to LET 90 MeV·cm²/mg
- Best Figure of Merit (FoM = $R_{DS(ON)}$* Q_G)

Direct-to-PCB packaging solutions



(NS) SupIR-SMD™
Size 6 die



(NKC) SMD-0.5e
Size 3 die



(NKC) SMD-0.2
Size 2 die



(NPC) SMD-0.1
Size 1 die

Copyright © International Rectifier HiRel Products, Inc. 2023. All rights reserved.

Enable higher power density and higher reliability of power distribution

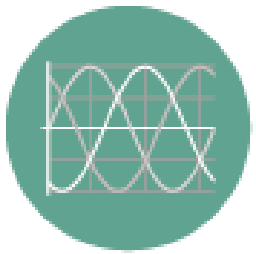

- Latest generation rad hard P-channel devices deliver higher current capability and can support higher current in linear mode applications



- They also offer simplified board design, higher reliability for space PMAD systems

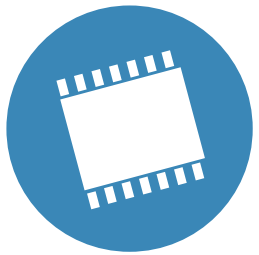

- System designers can forego larger die sizes or packages, and device paralleling, saving solution size and weight



- With improved figure of merit (FoM), electrical linear mode and SEE Safe Operating Area, new R9 P-channel FETs enable higher power density and higher reliability of power distribution circuits in space power systems

Copyright © International Rectifier HiRel Products, Inc. 2023. All rights reserved.

Questions?



Oscar Mansilla
oscar.mansilla@infineon.com
Product Marketing Director, Space
+1 480 627 5828

www.infineon.com/r9

Copyright © International Rectifier HiRel Products, Inc. 2023. All rights reserved.



An Infineon Technologies Company