# Design and Qualification of Power and Energy Systems for Space Applications

Richard Coffin, Darrin Druzbik









Space Power Workshop

(April 25-27, 2023)



© 2023 by EaglePicher Technologies - This document does not contain technology or technical data controlled under either ITAR or EAR – Approved for Public Release

# Holistic Approach to Design

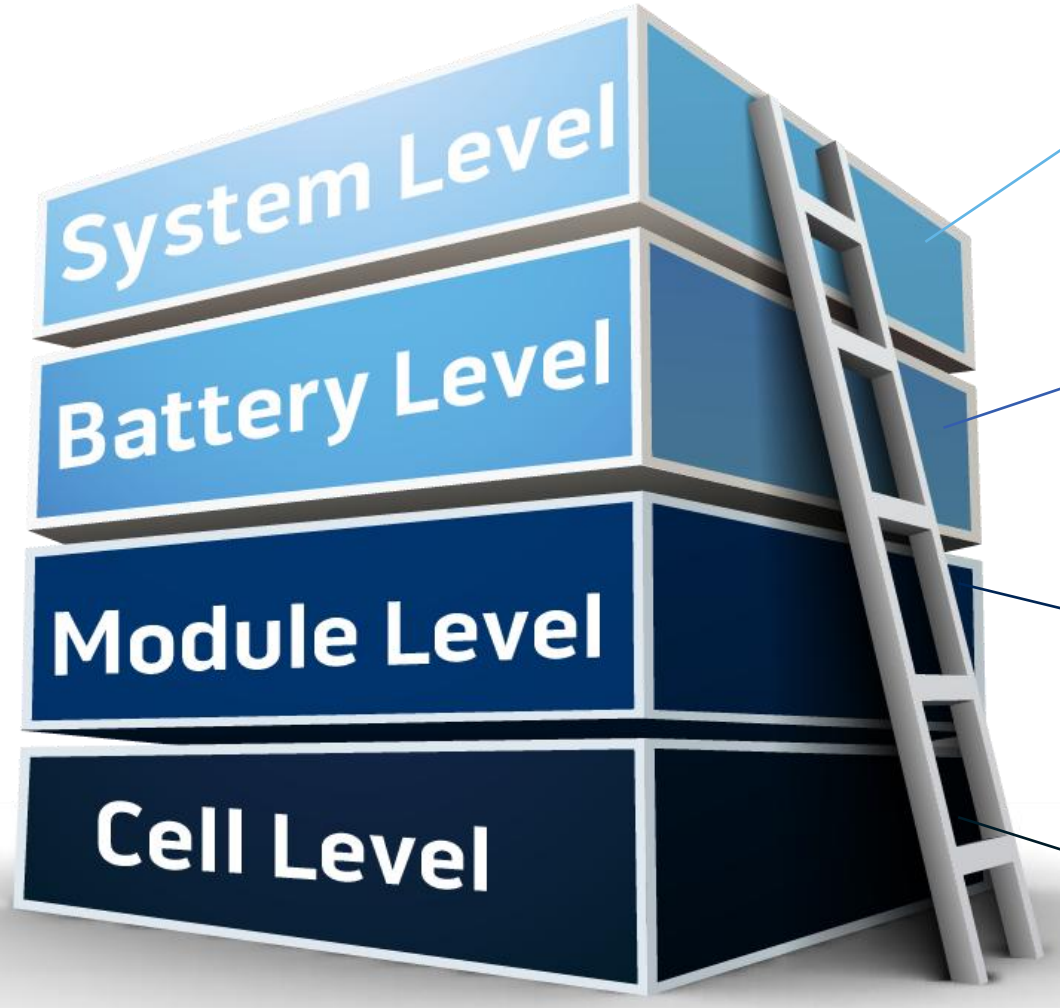


**Battery management system interface**

Protection, optimization, communication

**Capacity, Size, Mass, Cycle Life**

Containment, size, dissipation

**Thermal management**

Remove heat, manage heat dissipation

**Performance, abuse tolerance, response control**

Chemistry and form factor

# Present

## Avionics

- Batteries with BMS and cell balancing
- Batteries with BMS , balance and charging controls
- Batteries with BMS, balance, charging and SOH,SOC trending



# Present

## Space

- Batteries with Balancing and disconnect
- Batteries with TR (propagation mitigation) and protection for electronics

# Present and near Future

## Integrated Power Solutions

- Cell Packs ( Prismatic or COTS)
- BMS with SOH, SOC and optional Trending
- Charging ( from generators, external sources, solar arrays, Thermal piles)
- Regulated Power bus creation and control with SOH monitoring
- Communications to craft

# Opportunities

Specifying batteries with integrated Power Solutions provides the integrator the following benefits:

- Potentially a higher efficiency
- Lower total mass
- Lower risk
- Less supplier interface time
- A delivered complete power solution

# Packaging

- Thermal
  - Design of battery for thermal dissipation of cells
  - Design of electronics for heat dissipation
  - Incorporation of cooling
    - Active or passive
- Structural
  - Design of the housing for vibration & shock
  - Fastener Selection
  - Battery mounting
  - Internal cell mounting
  - Material selection
  - Design that is producible

# Battery System Build Up

- Simplest Battery solution – a single cell
- Applicable to Primary and Secondary cells that are charge outside the system






- Combining Cells into a battery string
- Allows for higher voltage or power



# Silver-Zinc Batteries (Rechargeable and Non-Rechargeable)

## General Characteristics

- LR: long-life, low-rate
- HR: medium life, high-rate
- PM: limited life, optimum performance
- 70 years of demonstrated performance
- 20+ year dry storage shelf life
- Capacities available up to 750 Ah
- High discharge rates up to 1,000 A
- Lighter, more compact than lead-acid and NiCd

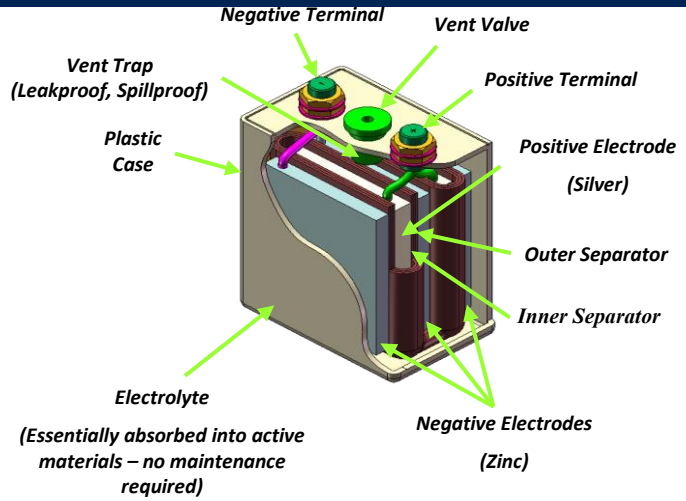




Harpoon



Trident



Minute Man II

EAGLEPICHER TECHNOLOGIES

# Lithium-ion Batteries (Rechargeable)

## General Characteristics

- Safe system designs
- Fully hermetic designs
- Multiple electrochemistries
- High power and energy chemistries
- Energy density up to 250 Wh/kg
- Power density up to 35,000 W/kg
- Volumetric density up to 500 Wh/L
- Operating temperatures from -60°C to +80°C
- Pouch, prismatic or cylindrical form factors

Prismatic Cell Electrode Stack

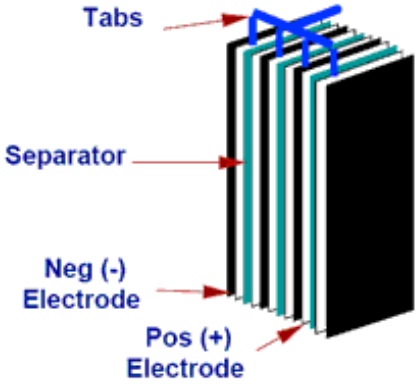




Hybrid Cell




Contego



X-37B



Portable Power



Global Hawk

# Battery System Build Up

- Adding balancing to allow for more uniform charge and differing cell capacity
- Host controlled charging

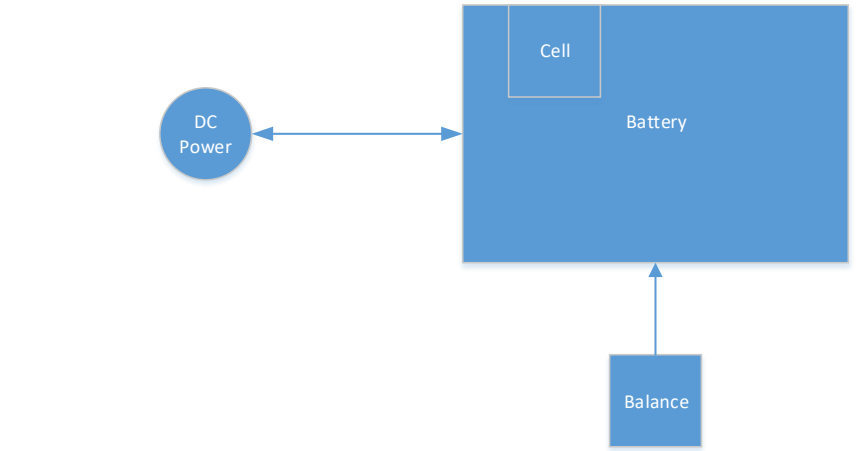


- Adding balancing to allow for more uniform charge and differing cell capacity
- Host controlled charging
- Current Monitoring ability

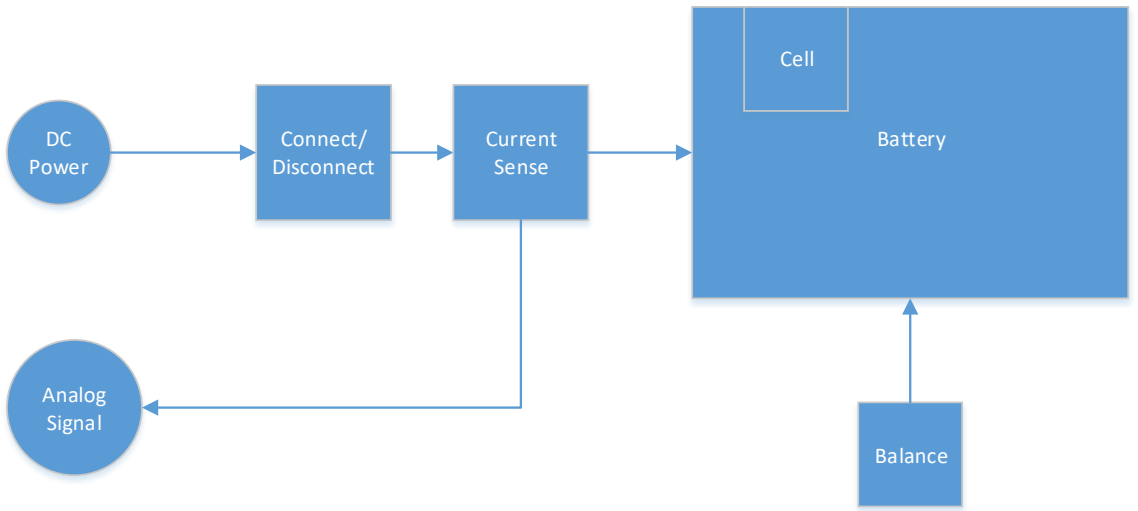

# Packaged Solutions (Rechargeable and Non-Rechargeable)

## General Characteristics

- Vertical integration
- Load management systems
- Input and output conversion
- Battery management systems
- High energy designs unlimited
- High voltage designs up to 1,000 volts
- High power designs up to 1,000,000 watts
- Harsh environment mechanical and thermal designs
- Chemistry agnostic

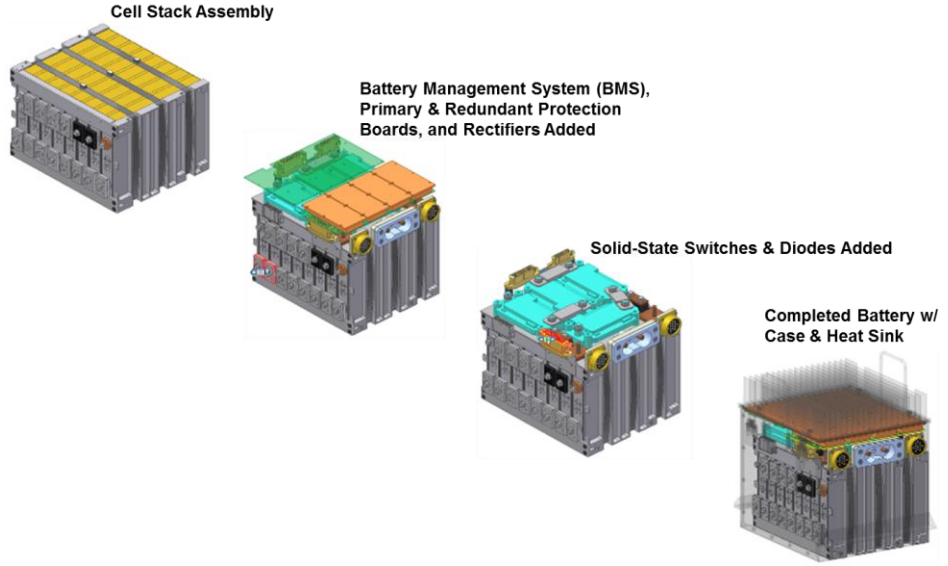


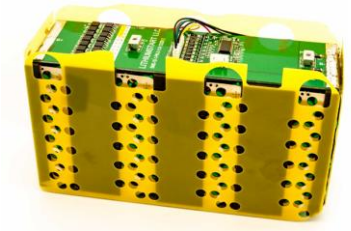

Jetboots



NOAA



P321



ESS/EML

EAGLEPICHER TECHNOLOGIES

# Thermal

- Thermal management
  - Cool plates
  - Pack Design













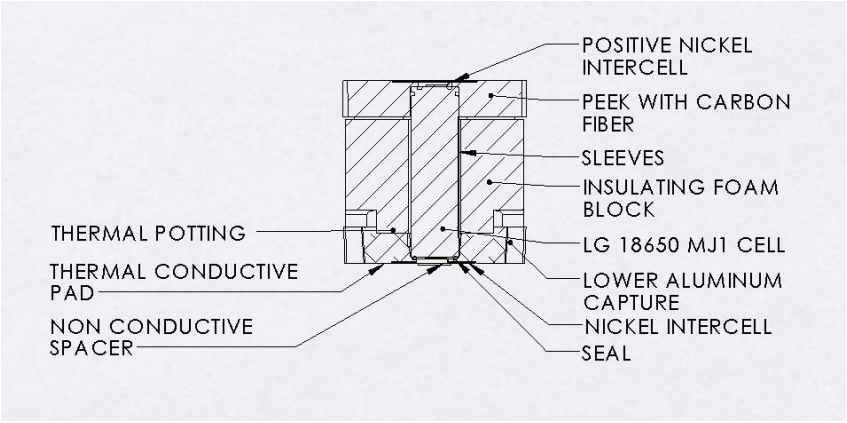


EAGLEPICHER TECHNOLOGIES

# Battery System Build Up

- Simplest Battery solution – a group of cells
- Applicable to Secondary cells that are charge outside the system
- Allows for higher voltage or power
- Adding balancing to allow for more uniform charge and differing cell capacity
- Host controlled charging
- Current Monitoring ability
- Basic BMS services to provide Balance, cell monitoring and control

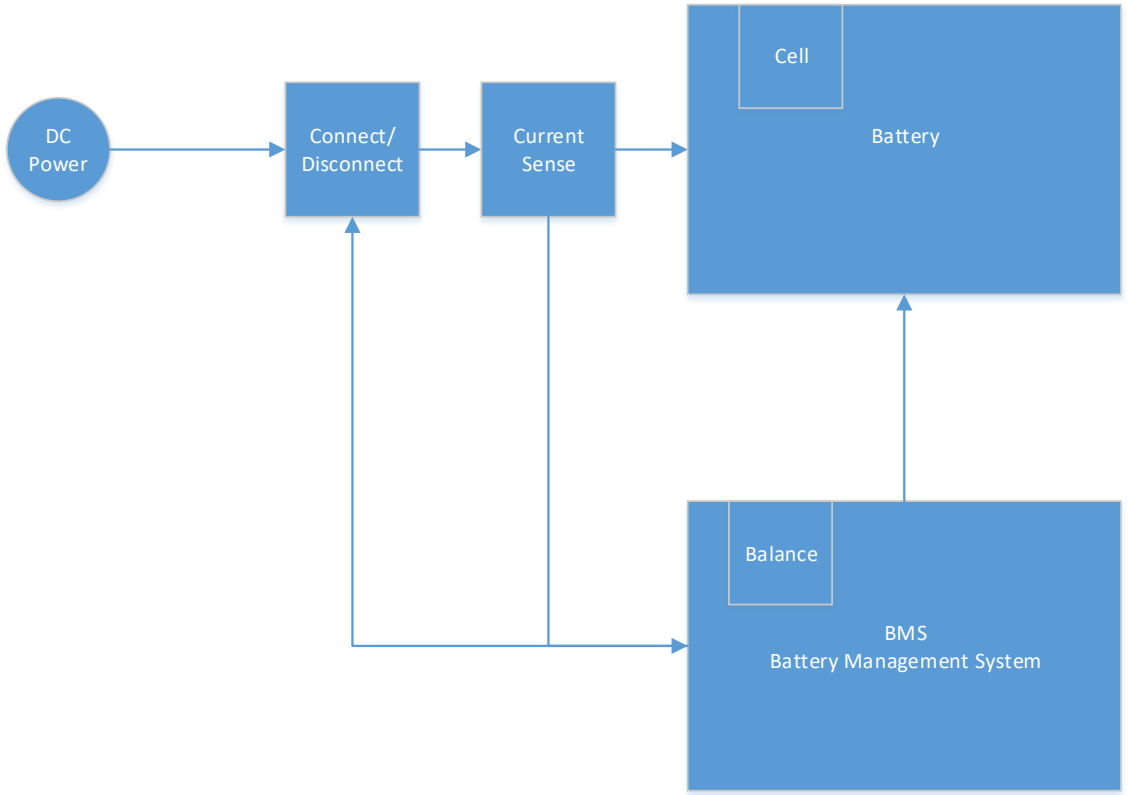

# Battery Management System Architecture and Safety

- Usual battery management system (BMS) functions and protections:
  - Charge and discharge control
  - Telemetry (voltage, current and temperature)
  - Status (state of charge, state of health and failure status)
  - Fault protection (voltage, current, temperature, leakage current and short detection)
- Redundancies to ensure continued operation
  - Microprocessor utilization
  - Built in dual memory
  - Analog redundant parallel monitoring
- Additional Attributes
  - Cell Balancing:  Passive or Active (processor controlled)
  - Charge cycle counting
  - State of health projections
  - Local data storage and trending
  - Local bit error and self test modes
- “Battery Compartmentalization” MIL-PRF-29595 requirement to isolate cells from other functioning sub-systems

BMS is NOT just electronics but it is a way to maximize the battery life and cost efficacy.

# Smart Batteries

Crafts using Multiple Battery solutions provide a an opportunity for  implementing smart battery solutions

- As the number of parallel battery solutions are operating on a craft the ability to perform a balanced charge on the individual cell pack units becomes more difficult is the batteries are simply attached to the solar array and located throughout the craft.
- Cable impedances , differences in craft temperatures all can result in batteries charged to different levels.
- This can result in some of the battery systems being required to handle a higher percentage of the load in a higher temperature environment.
- Smart Batteries allow for local charge control to better balance the state of charge .
- They can also include load balancing across the battery solutions on a common bus.

# Power Electronics

Reliable power Electronics is a must for space applications.

- Environments are Harsh and unforgiving
- Severe Thermal , Mechanical and radiation conditions
- Long Mission Lifetimes
- Batteries are required to power the craft during eclipses that occur on all orbital space flights.

Radiation Hardened devices are required to meet the performance requirements. These devices are expensive and difficult to source

# Battery System Build Up

- Simplest Battery solution – a group of cells
- Applicable to Secondary cells that are charge outside the system
- Allows for higher voltage or power
- Adding balancing to allow for more uniform charge and differing cell capacity
- Host controlled charging
- Current Monitoring ability
- BMS services to provide Balance and control
- Communications

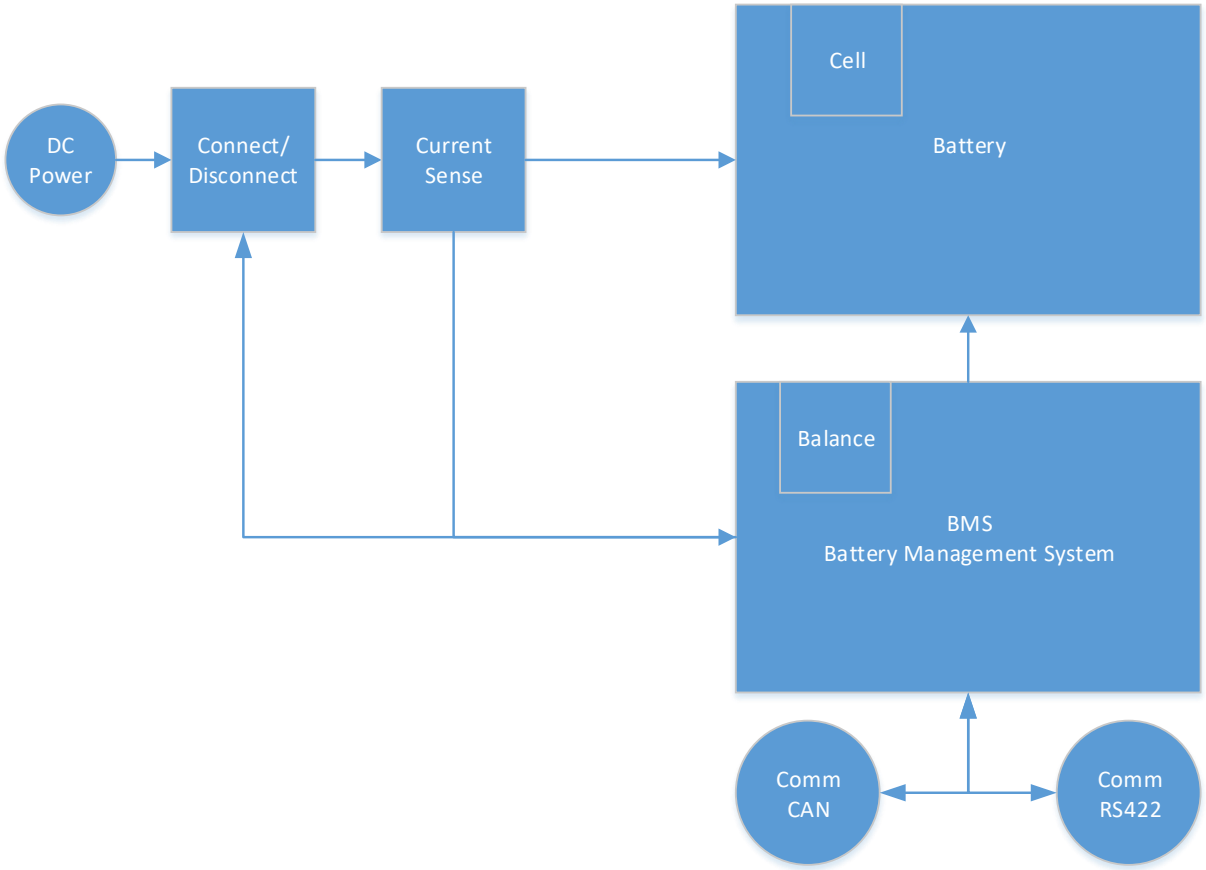

# A “Dumb” Battery System



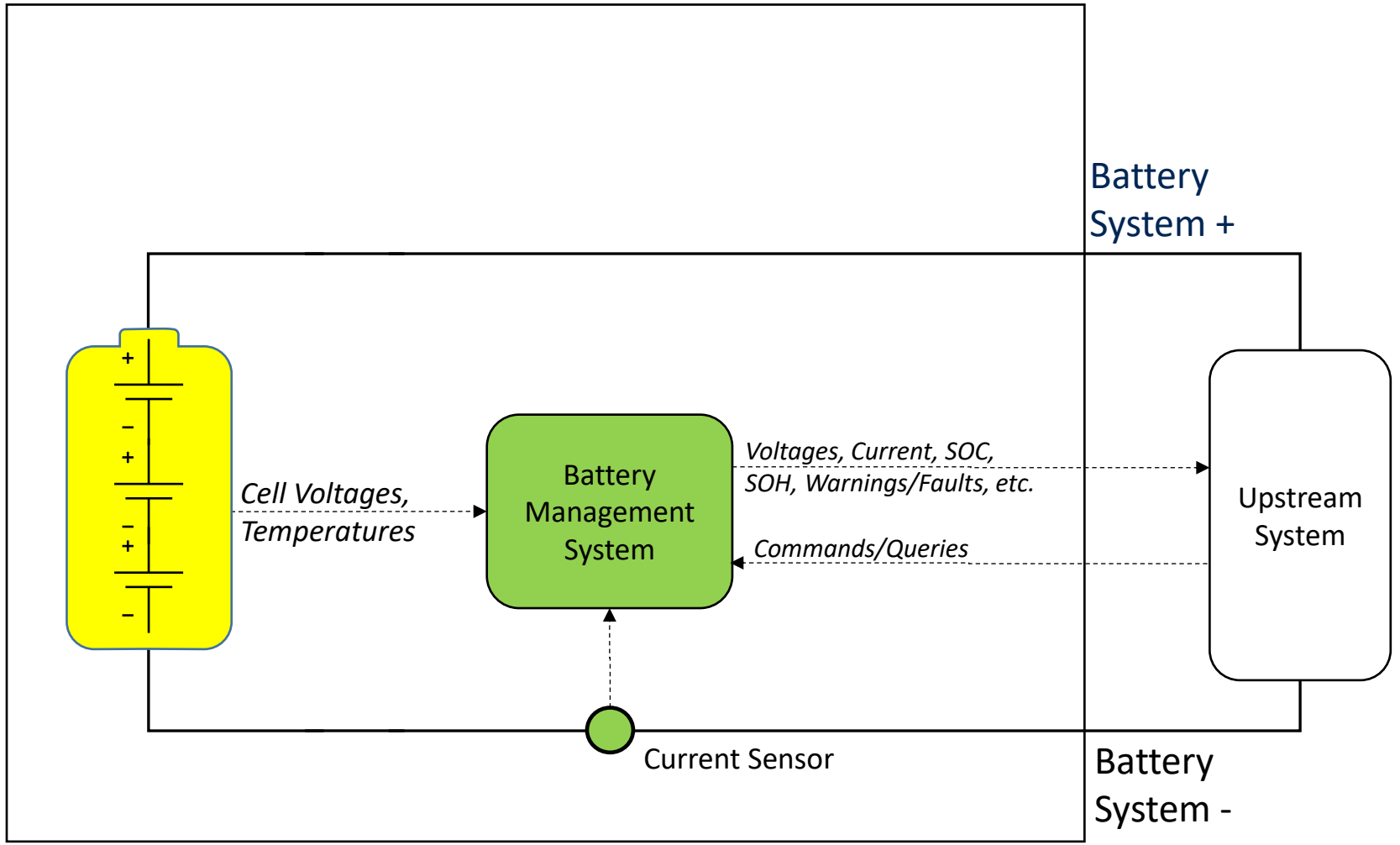

# A Basic Battery System



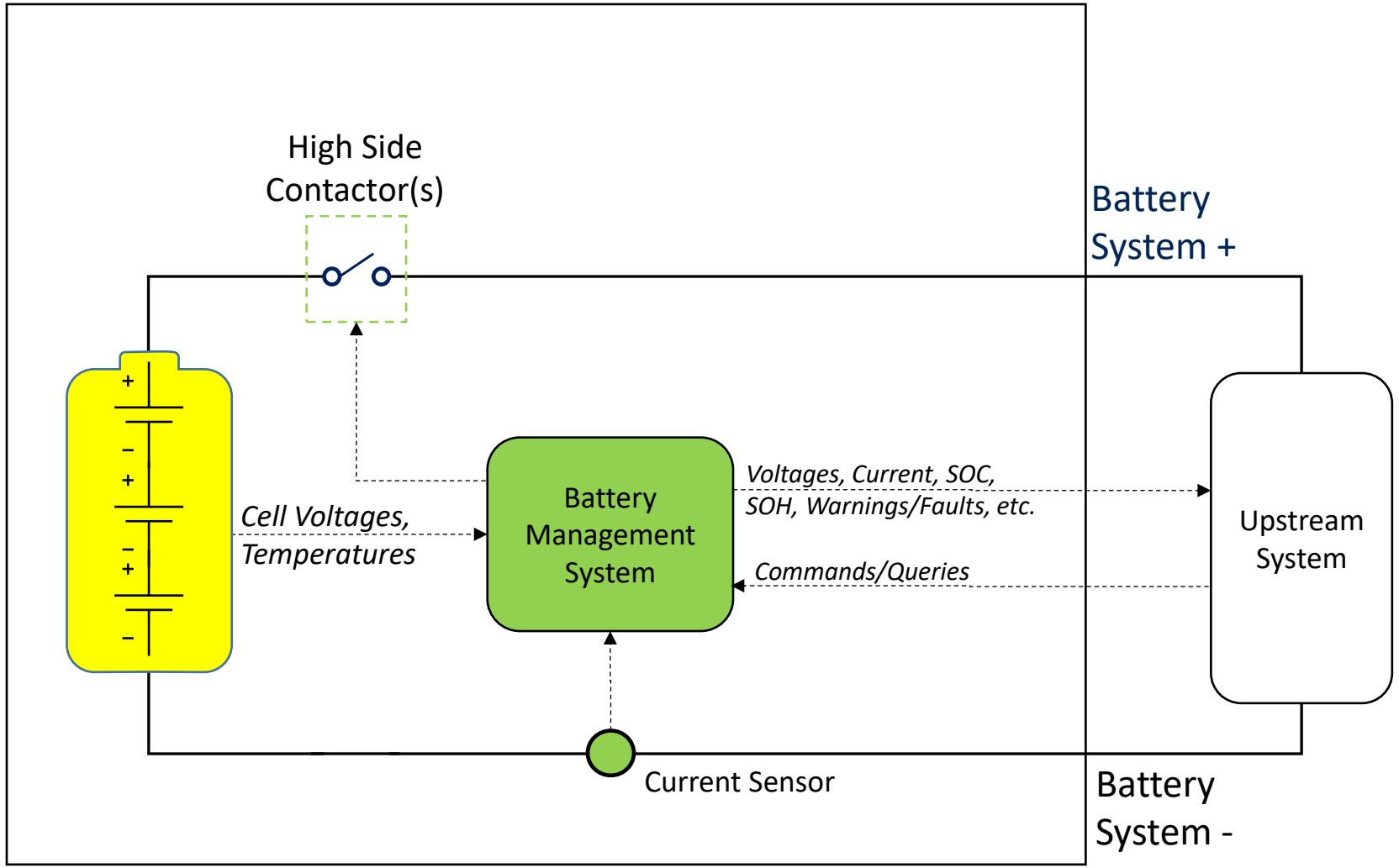

# A Basic Battery System



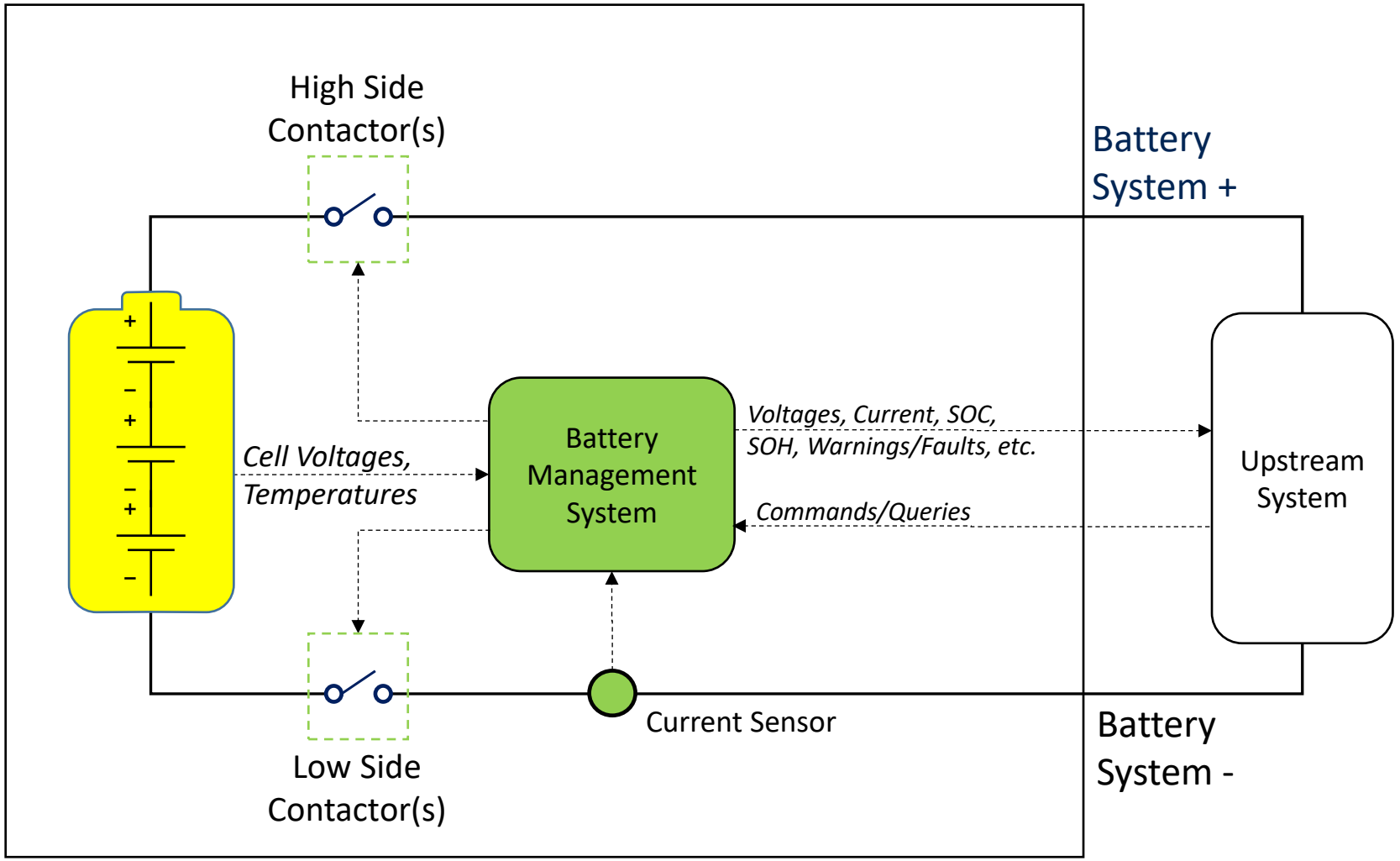

# Smart Battery System

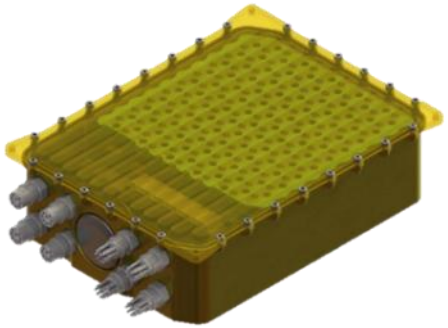

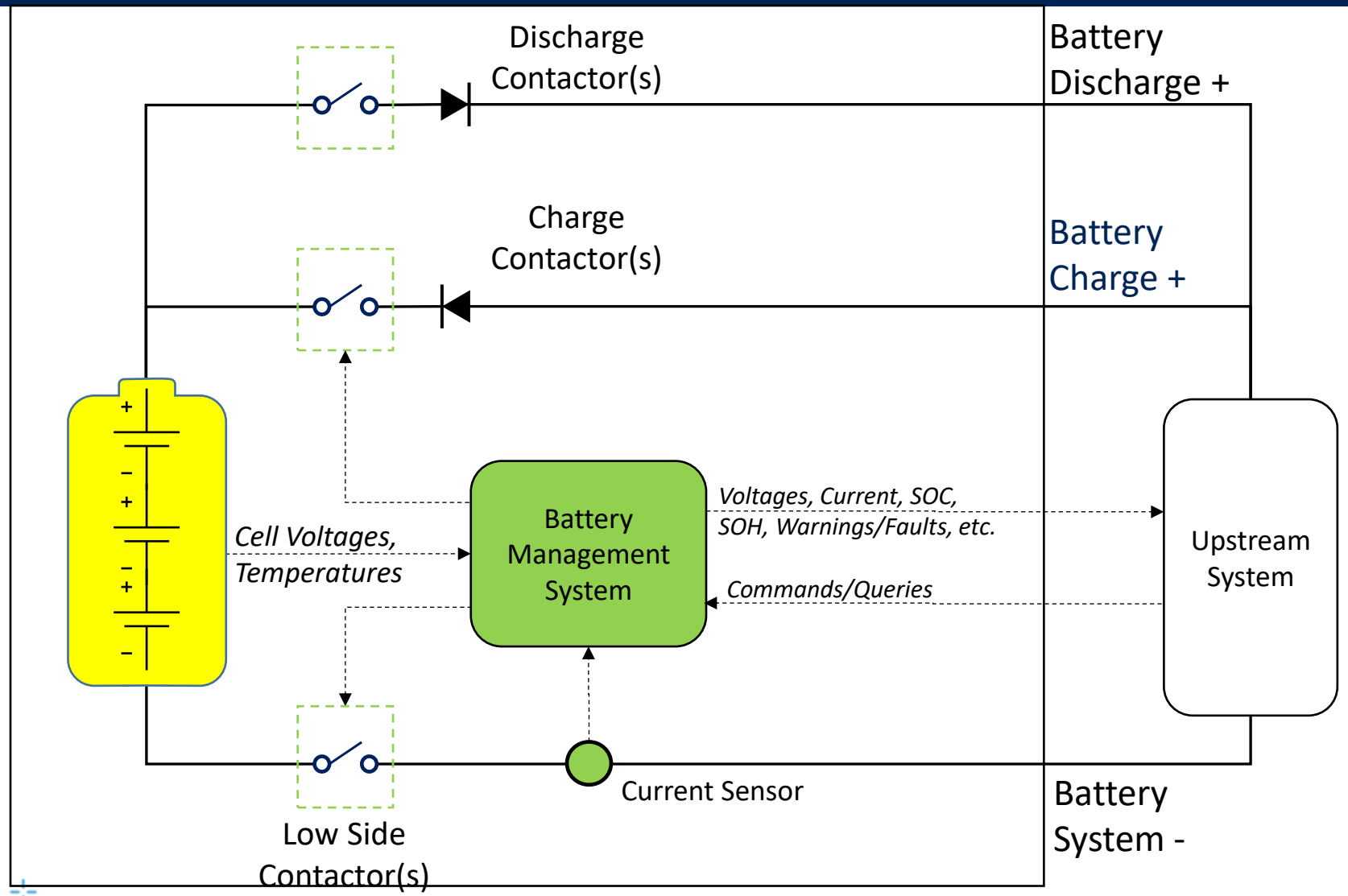

# Module Interface

Smart Batteries – Interface via digital communication

- The communication consists of Voltage, Current , and temperature measurements
- Temperature data is available and can be used to control cell charging
- Status information on SOC (state of charge)& SOH ( State of health) can be transmitted.
- Local battery protection can be in-place with disconnect capability for normal faults
  - under/over voltage
  - over current
  - over Temperature

# Battery System Build Up

- Simplest Battery solution – a group of cells
- Applicable to Secondary cells that are charge outside the system
- Allows for higher voltage or power
- Adding balancing to allow for more uniform charge and differing cell capacity
- Host controlled charging
- Current Monitoring ability
- BMS services to provide Balance and control, and communications
- Pre-Charge

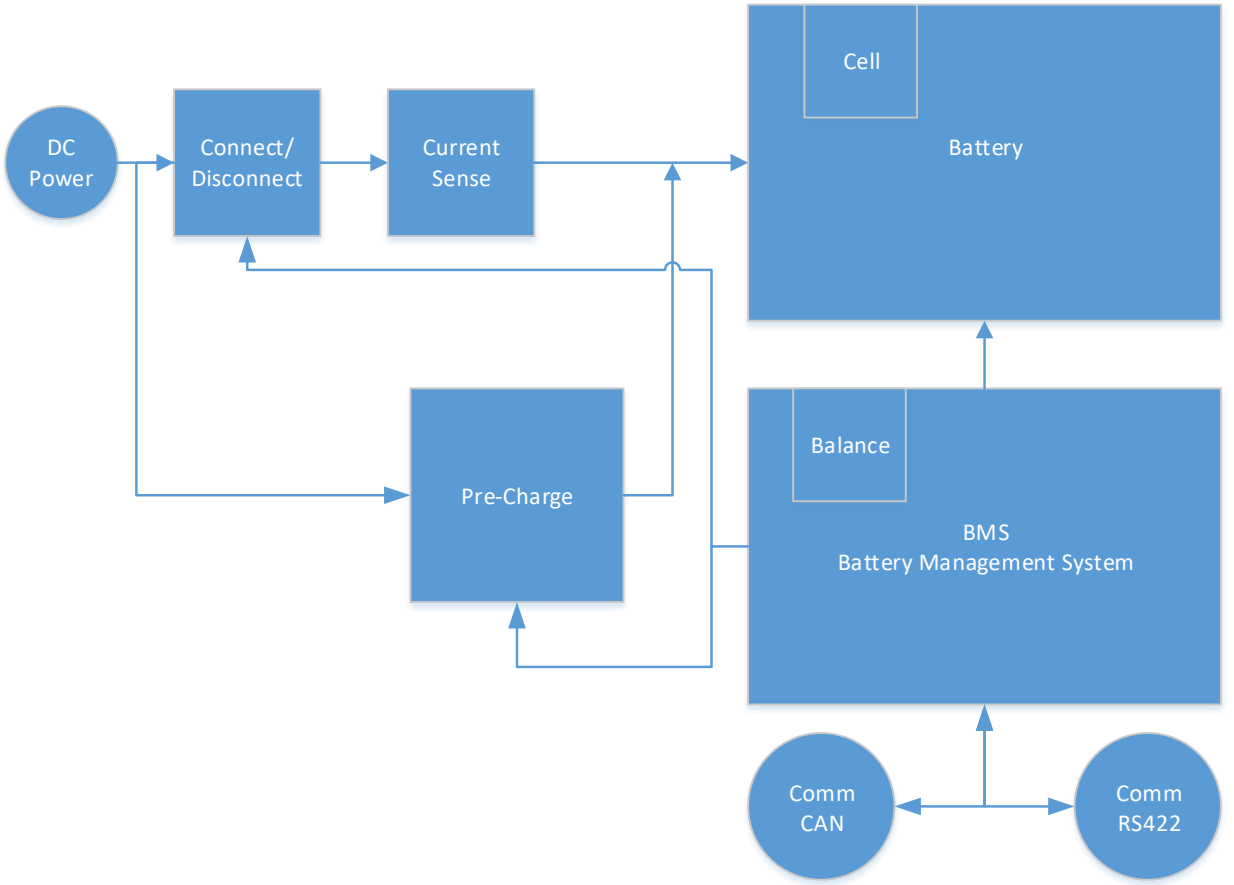

# Battery System Build Up

- Simplest Battery solution – a group of cells
- Applicable to Secondary cells that are charge outside the system
- Allows for higher voltage or power
- Adding balancing to allow for more uniform charge and differing cell capacity
- Current Monitoring ability
- BMS services to provide Balance and control, and communications
- Pre-Charge
- Battery Integrated Charger

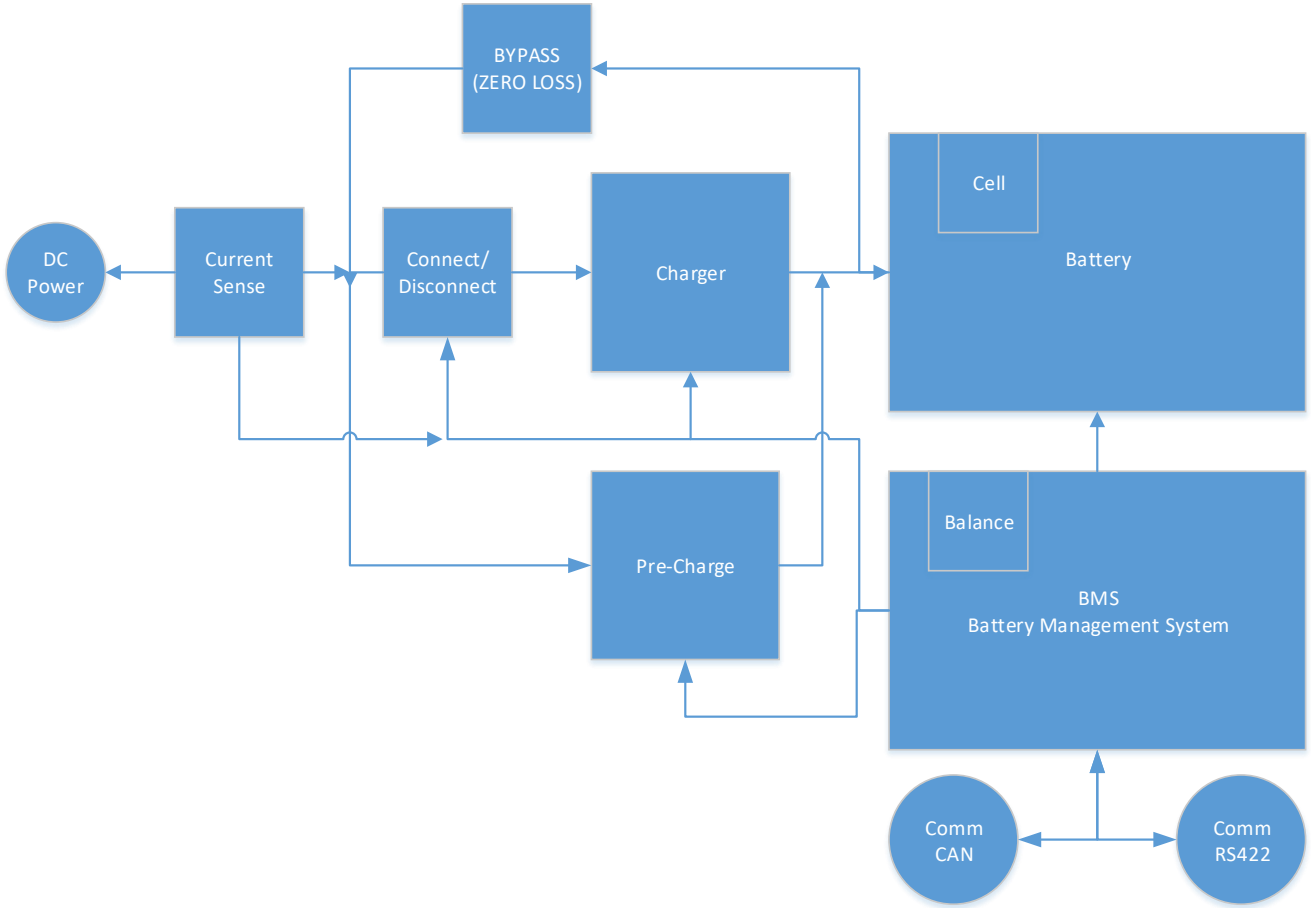

# Battery System Build Up

- Simplest Battery solution – a group of cells
- Applicable to Primary and Secondary cells that are charge outside the system
- Allows for higher voltage or power
- Adding balancing to allow for more uniform charge and differing cell capacity
- Current Monitoring ability
- BMS services to provide Balance and control, and communications
- Pre-Charge
- Battery Integrated Charger
- Regulated DC output voltage ( any number)

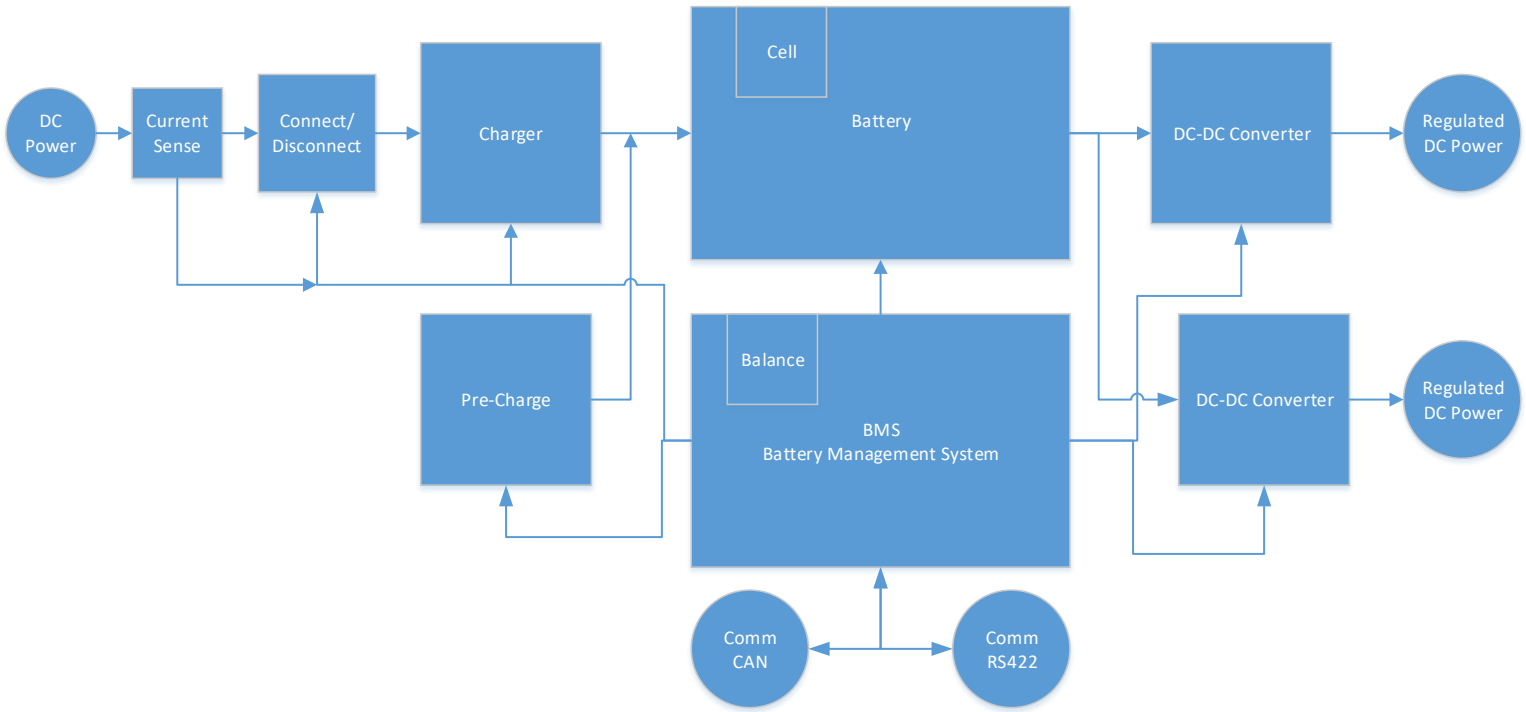

# Hybridization

## Hybridization of power and energy solutions to provide optimized performance

- Bus voltage stabilization reduces strain on generators and other equipment
  - >80% reduction in peak to peak voltage transients
- Power for take-off and flight surfaces, Energy for long duration flight
- Increased life by reducing stress on energy source
- Reduced size and weight by increased energy and power densities
- Independent solutions are replaceable for maintenance and upgrades

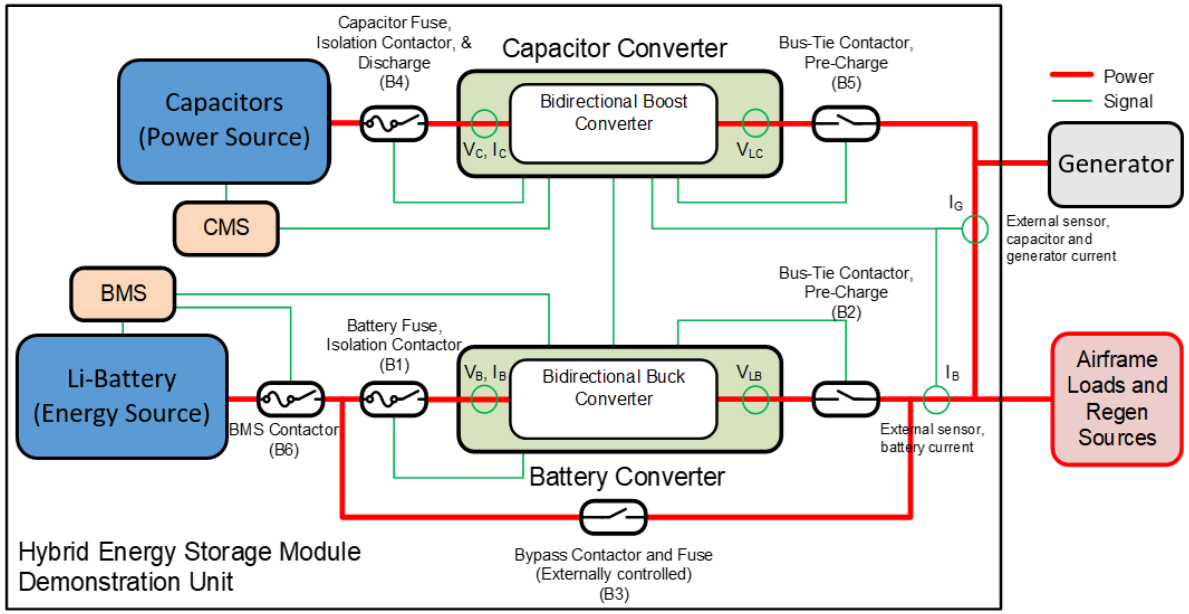

# DC –DC Design

Isolated input :

- These designs tend to provide the lower efficiency but may be required due to the power architecture of the craft.

- As with all space projects low mass is the goal, forward converters offer a low mass solution
- The Fly-back is the most common but the magnetics mass on high power can be high.

Non-Isolated input :

- These designs tend to provide the higher efficiency where the battery and the converter share a common connection.

- Lower power system mass can be achieved with high frequency Buck and Boost converter designs.
- Optimizing battery string voltage can increase efficiency and performance. As a solution provider we can perform these trade offs.

# Smart Battery with Charging

Battery Charging can be implemented in numerous ways

- Direct connection to the solar array with a peak voltage clamp
- MPPT – Maximum Peak Power Transfer
- Local Battery charge control for crafts with multiple Battery Power solutions.

- As with all battery charging systems, the solution that provides the best cell life and performance are ones that monitor temperature both high and low and control the current

# Design Standards and Testing

## Battery requirements fall into three basic categories

- Electrical
  - Voltage, current, power, energy, etc.
  - Fault tolerance and redundancy
  - State of health
  - Electrical interfaces
- Mechanical
  - Physical dimensions or envelope
  - Thermal performance
  - Mechanical interfaces
  - Environmental constraints
- Safety
  - Human
  - Environmental
  - System

## Battery requirements address three basic states of hardware

- Storage
- Active or in use
- Transportation

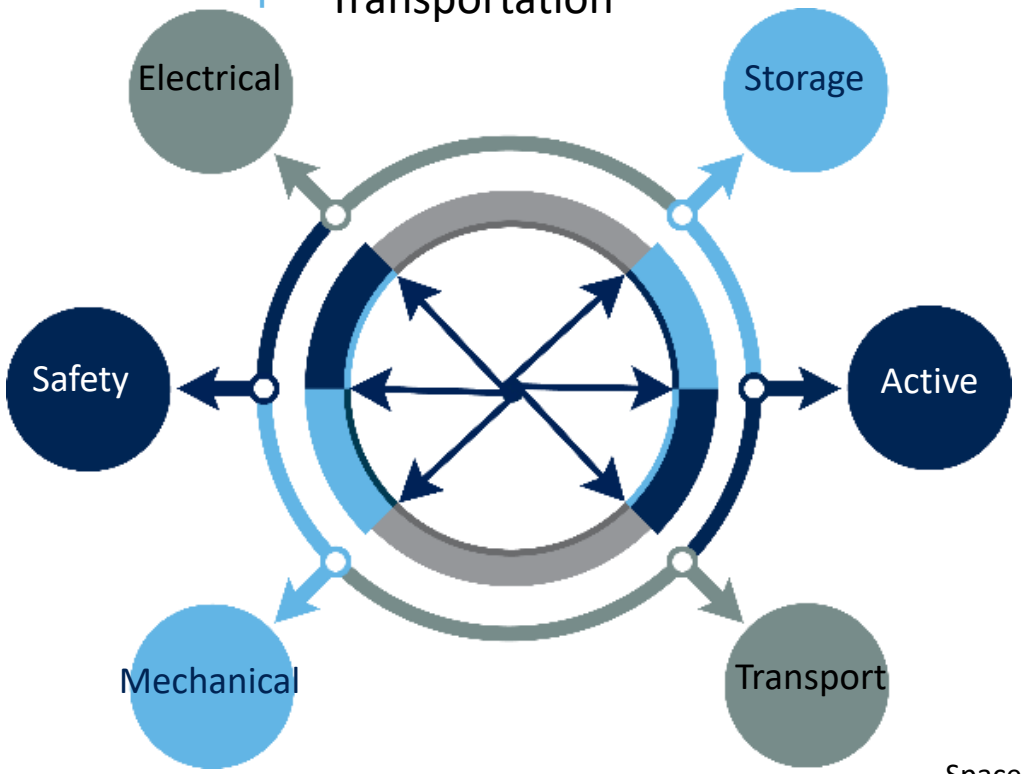

# Qualification

Qualification of smart battery designs and simple battery designs start with similar goals.

The testing involves :

- Cell level testing
- For COTS cells,  Cell pack performance testing

At the system

- Safety and Isolation
- Performance at temperatures
- Retention
- Vibration
- Shock
- Thermal testing ( TVAC)
- And repeat of performance testing

# Power System Qualification

Qualification testing of the power system at the battery supplier provides:

- The entire system is tested including the BMS , Charging and Load converters.
- This reduces the risk at the integration level as the battery interface to the converters and the BMS are qualified together.
- The integrator receives a battery solution that is qualified and designed to perform at a high level of efficiency and reliability.

# Questions:

What details are of additional interest?