A Modular, High-Power, Radiation-Hardened, DC-DC Converter with Decentralized Control

Presenter: David Grant (davidg@apogeesemi.com)

Alex Hanson (ajhanson@utexas.edu)

Anton Quiroz (anton@apogeesemi.com)

Space Power Workshop - Aerospace

Powering lunar/Martian habitats

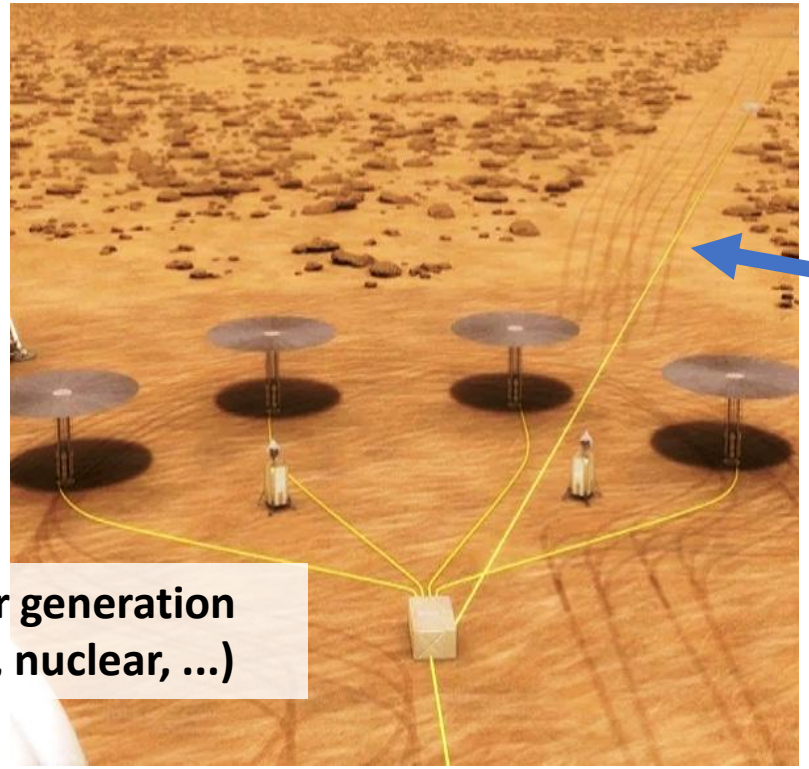

Power generation (solar, nuclear, ...)

Transmission 1 km

A Martian power concept (courtesy NASA)

Adopt high transmission voltage to reduce cable weight

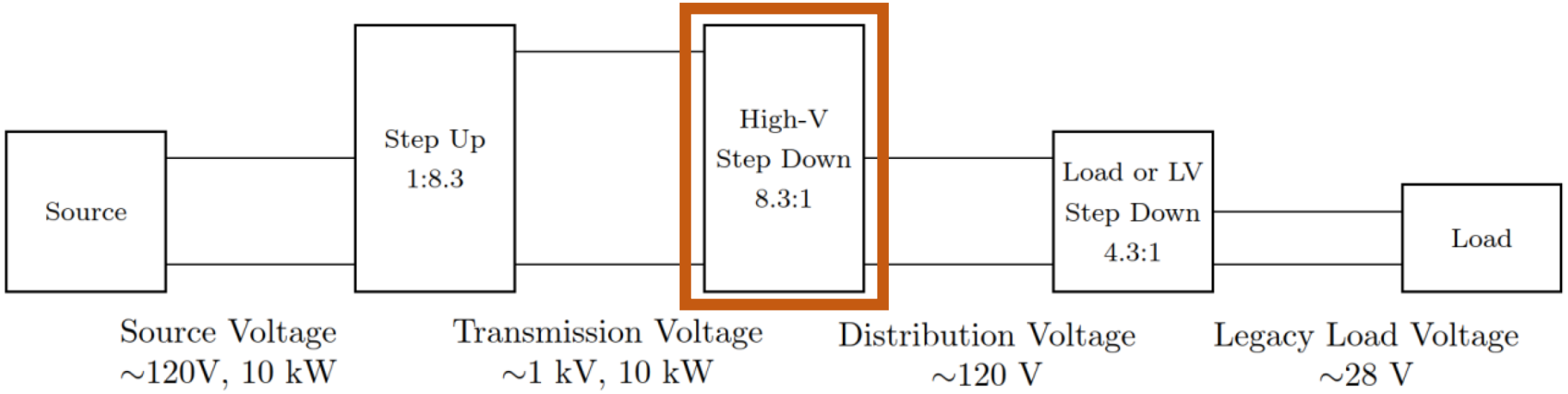

Silicon outlook fairly grim

Silicon Carbide not much better

STRH100N10 — Rad-Hard 100 V, 48 A N-channel Power MOSFET

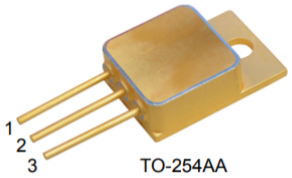

TO-254AA

Features

V_{DS}	I_D	$R_{DS(on)}$ typ.	Q_g
100 V	48 A	30 mΩ	135 nC

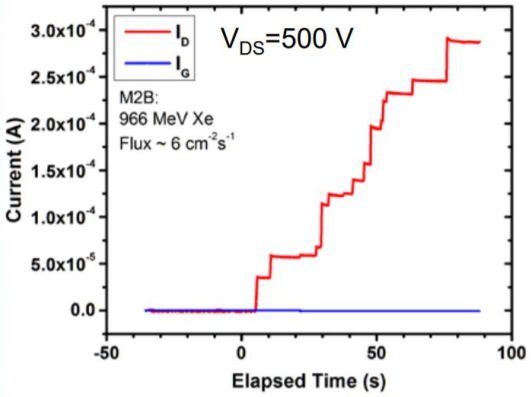

1200V MOSFET biased at 500V: increasing permanent drain leakage current with ion fluence

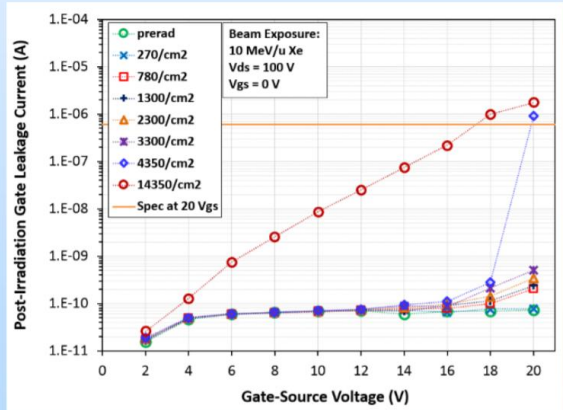

Same part type at 100V: permanent degraded gate leakage current with ion fluence (as measured post-irradiation)

We need…

1) a modular architecture to stack low-voltage modules into a high-voltage stack

2) a rad-hard IC technology for sophisticated control with low die area and power consumption

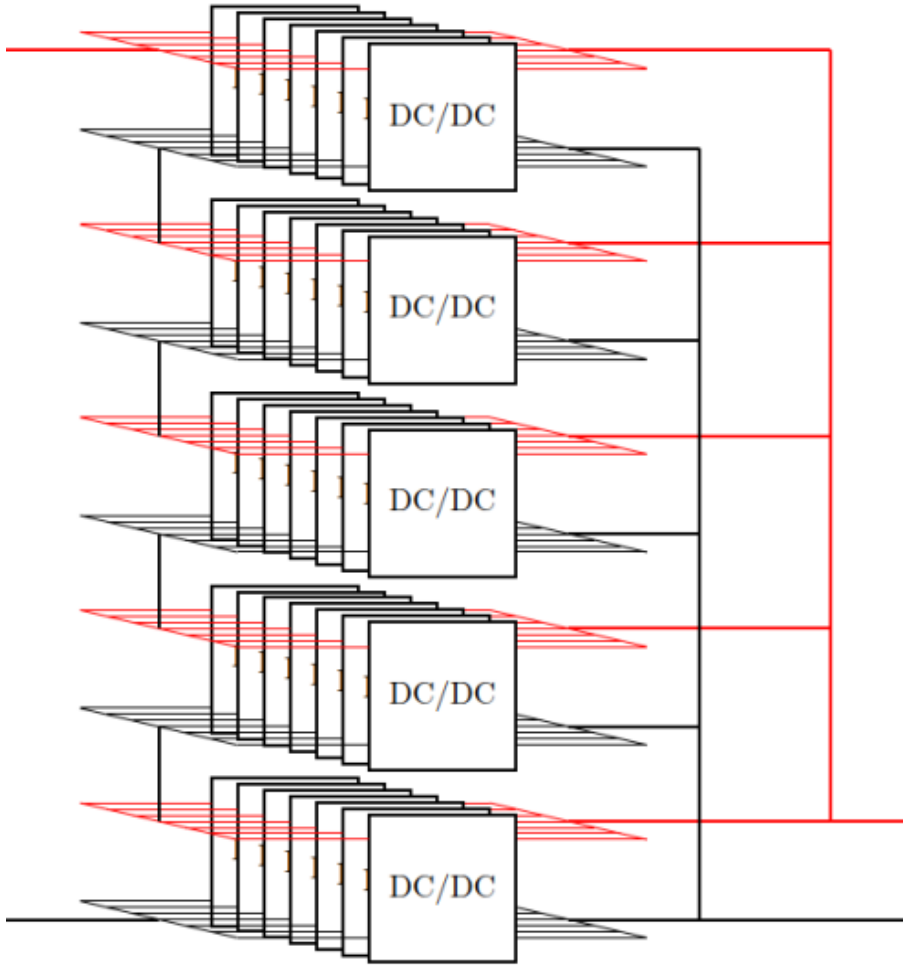

Benefits of modularity, space/terrestrial

- Handle high voltage (with low-V parts with better FOM)
- Handle high current
- Ability to shed modules for high efficiency
- Operate at high-frequency
- Lightweight modules easy to handle, ship, assemble
- Large surface area for conducting heat
- Access to inexpensive low-power parts with high production volumes
- Ability to operate through failures, repair/replace without downtime

High-frequency, phase-shift controlled modules

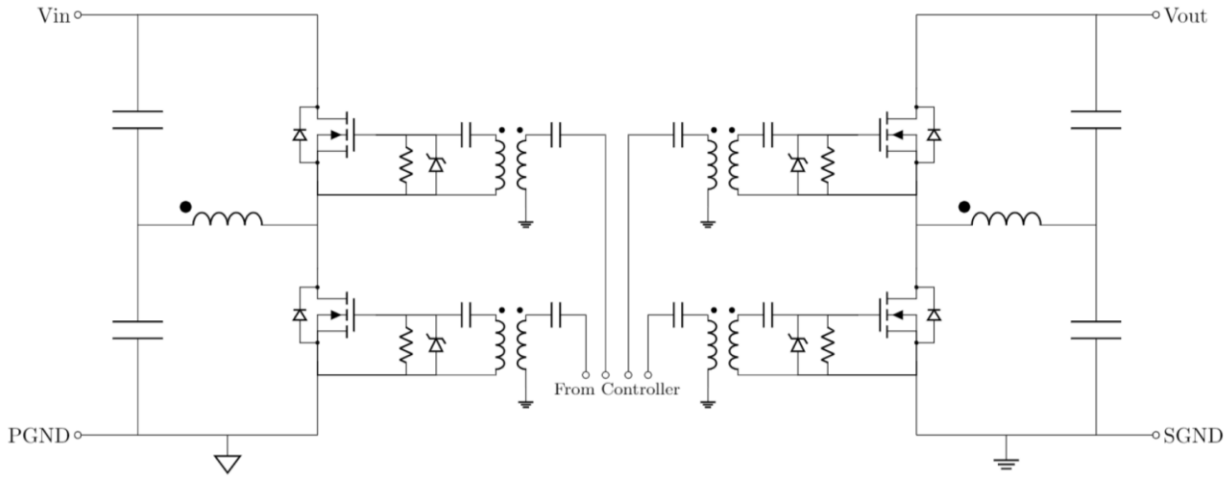

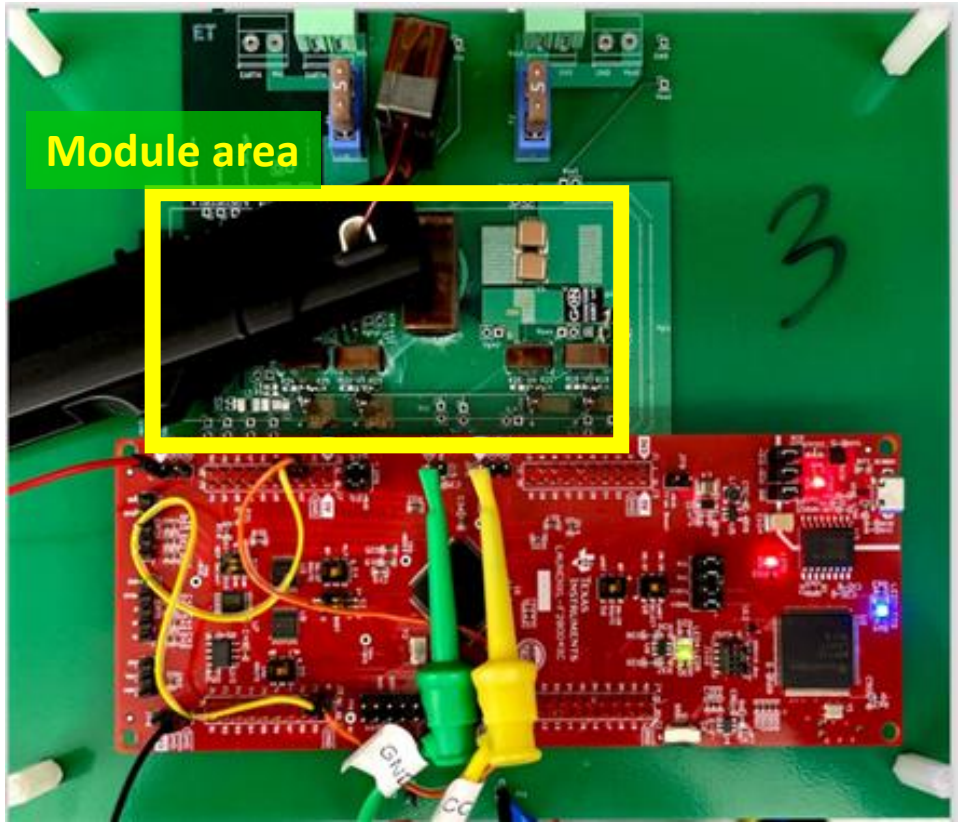

One module > 100 W/in^3
1 MHz

Key to modularity – decentralized control

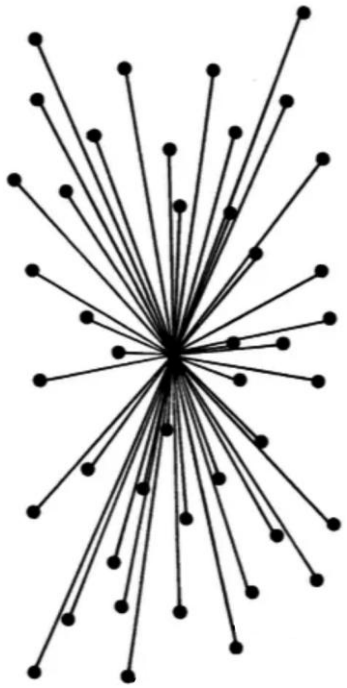

CENTRALIZED

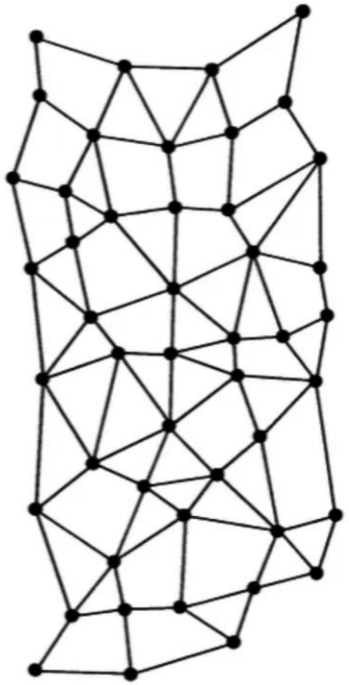

DISTRIBUTED

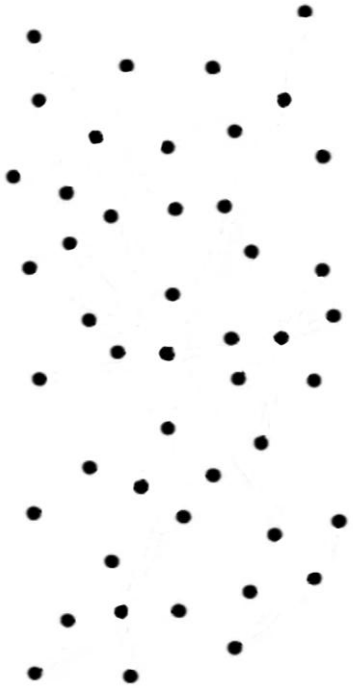

DECENTRALIZED

Fewer interconnects, greater resilience, truer “modularity”

A decentralized power-sharing controller

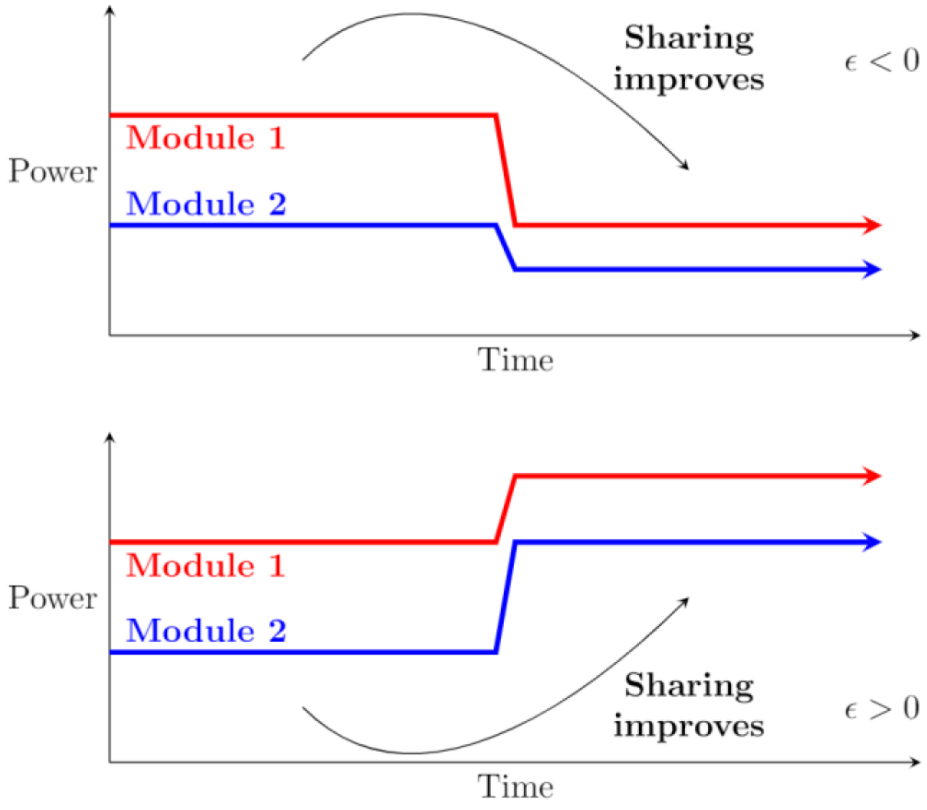

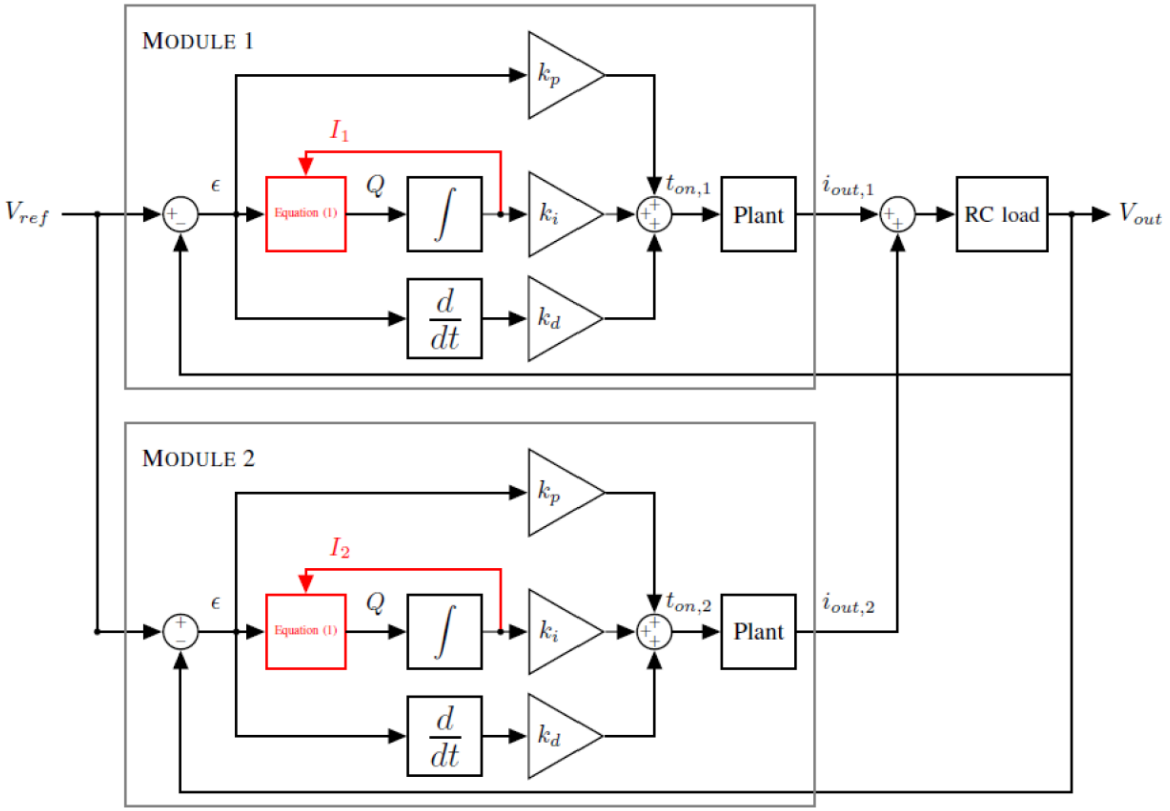

Two options for non-linear feedback

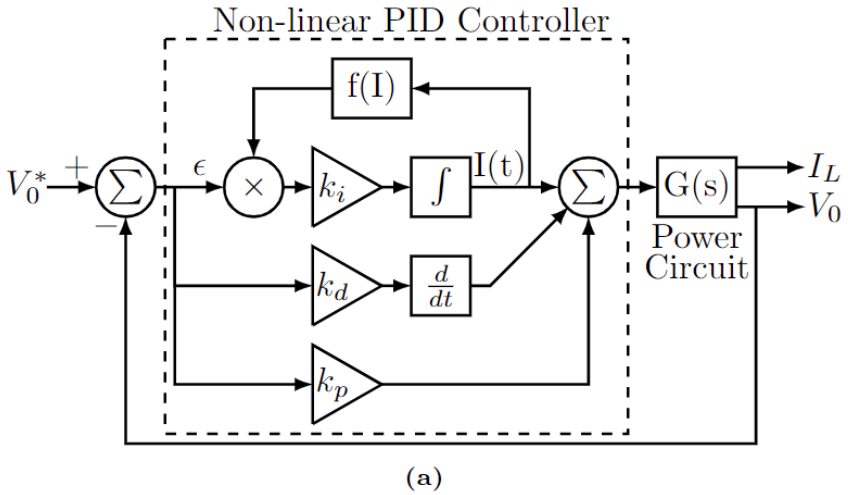

(a)

The output of the integrator is a proxy for power that requires no sensing

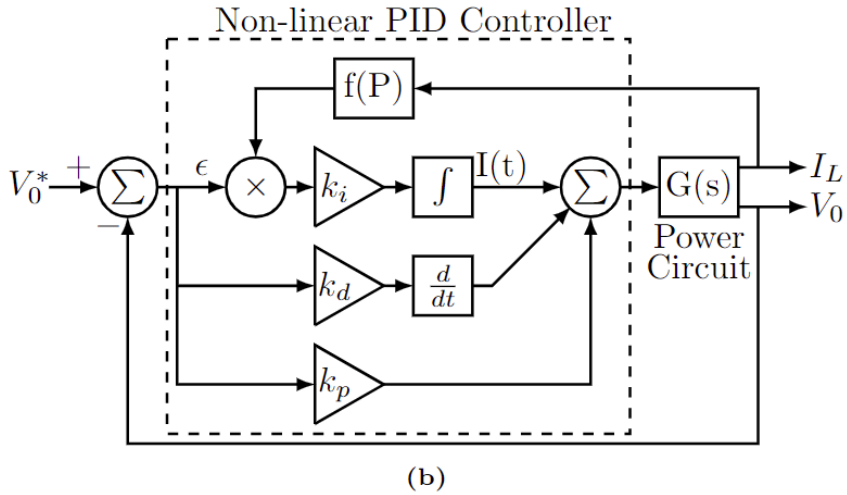

(b)

The inductor current or output current is a proxy for power that does require sensing

- Power/current feedback forces all modules' **powers** to converge, while integral feedback forces all modules' **control variables** to converge
  - Equal control variables = equal power in some converters, but not all

Input-parallel-output-parallel 6 modules

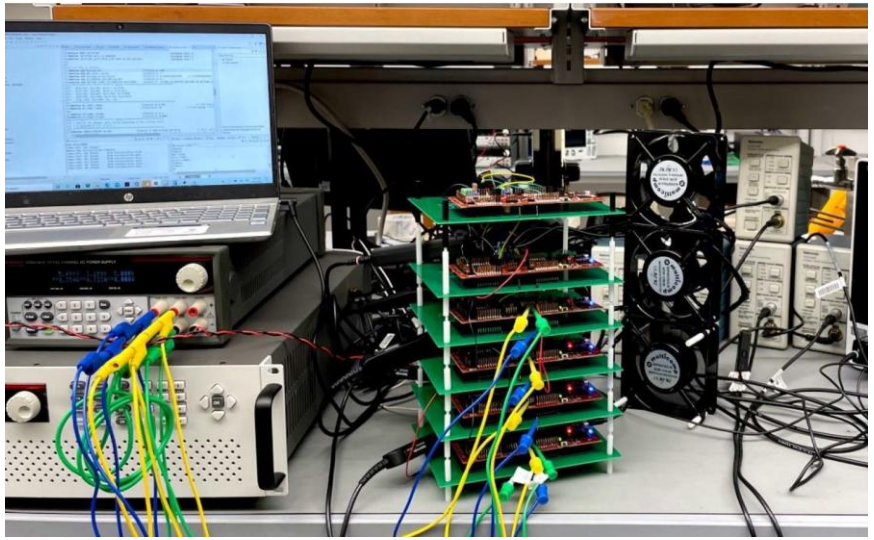

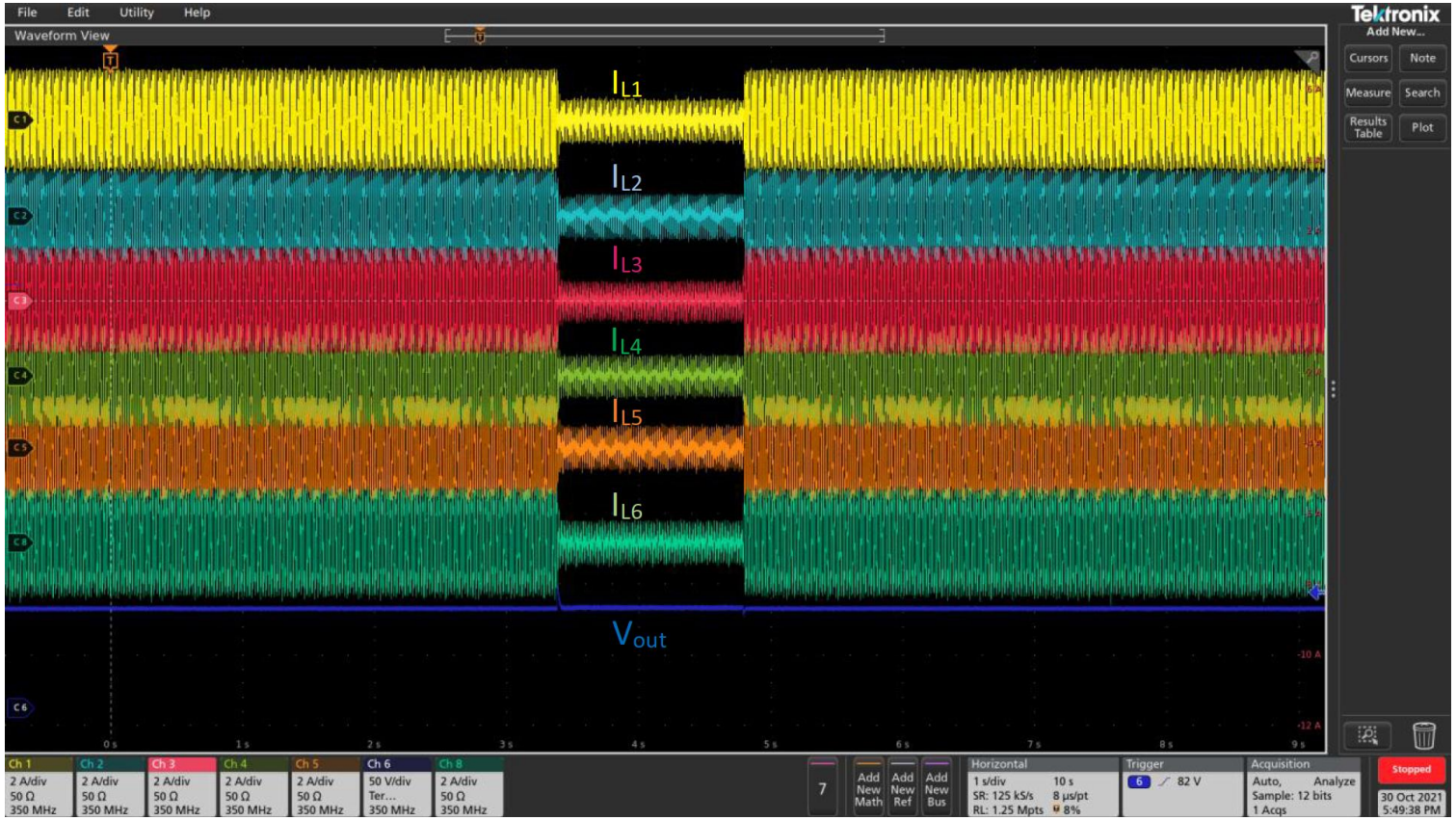

Input-series-output-parallel 5 modules

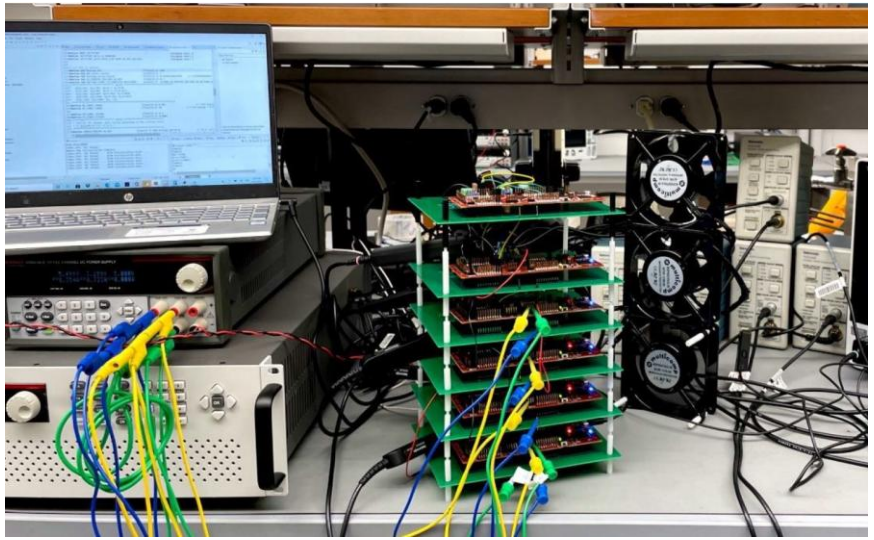

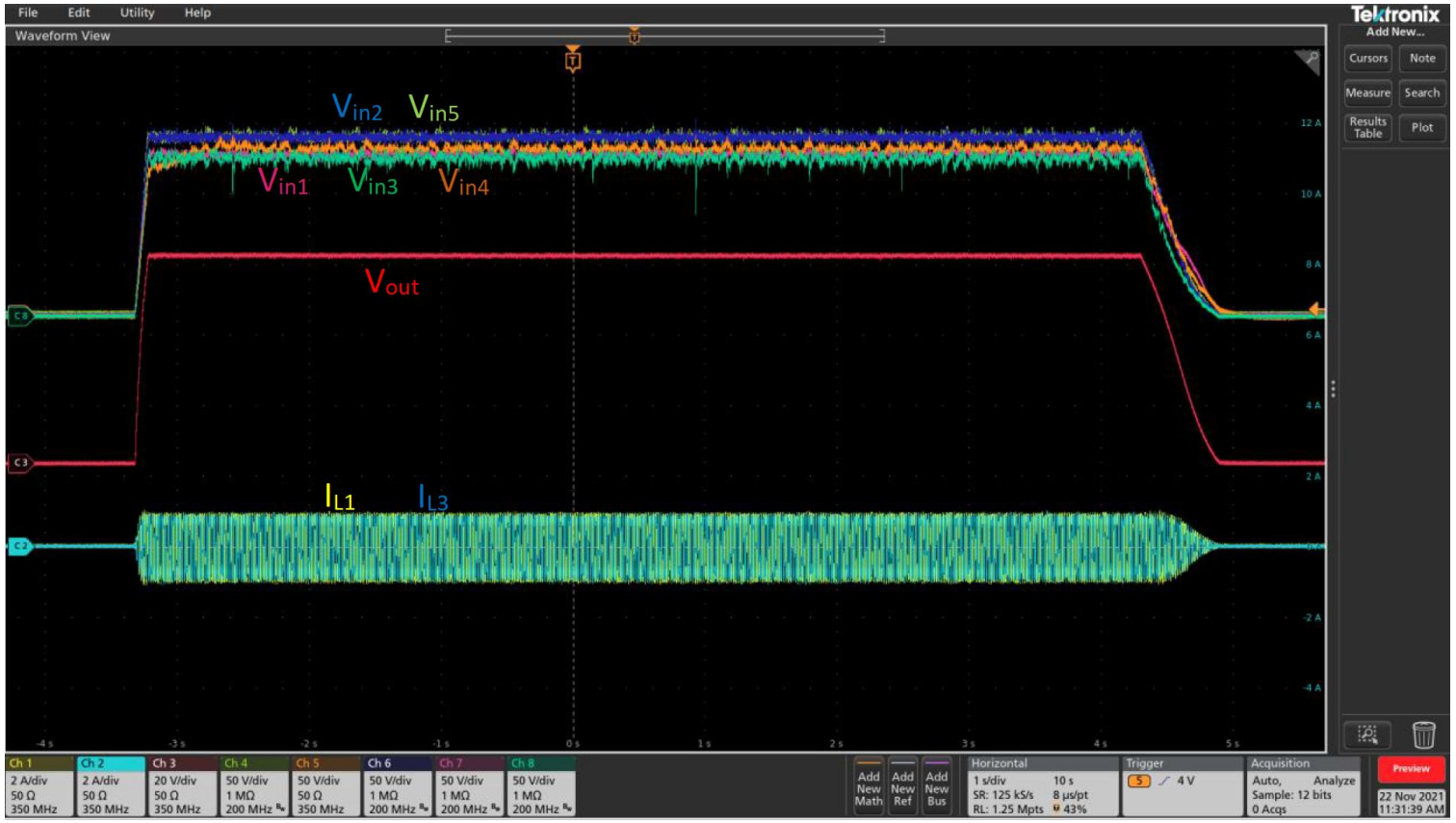

Input-series-parallel-output-parallel 6 modules

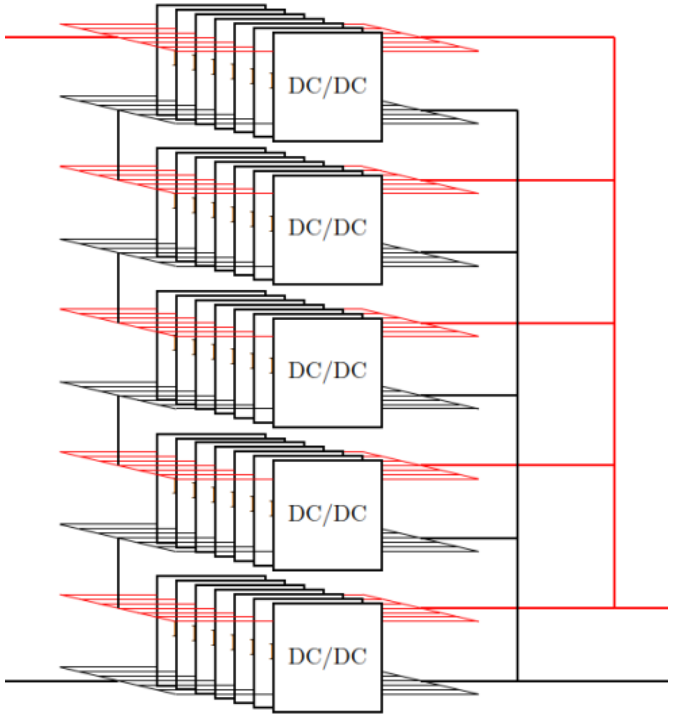

3 wide, 2 tall on input

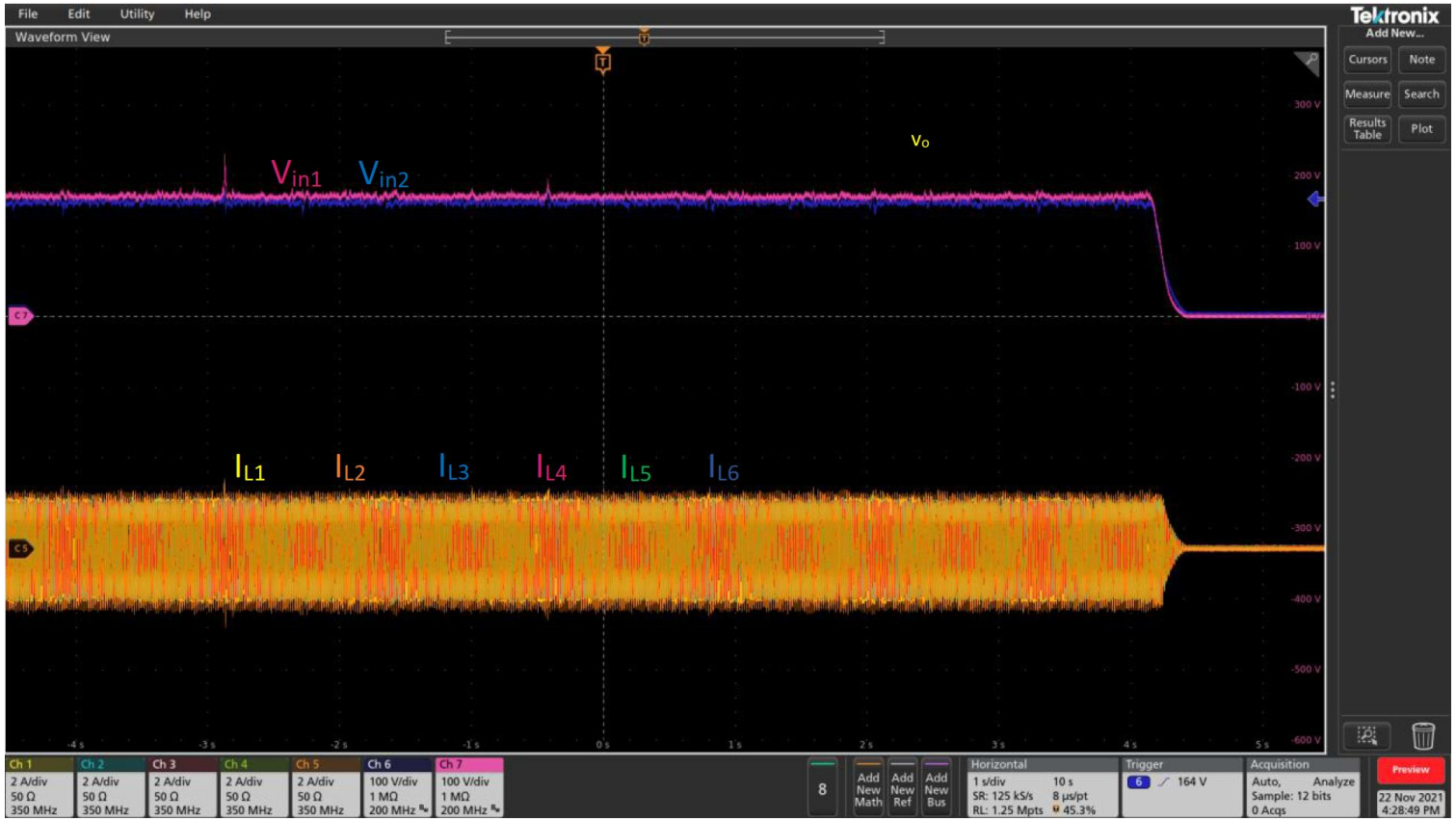

What about the controller IC?

Controller IC requirements

- Capable of controlling four transistor phase shift bridge
- Able to implement more complex power sharing algorithm
- High immunity to single event effects
- High immunity to TID induced drift

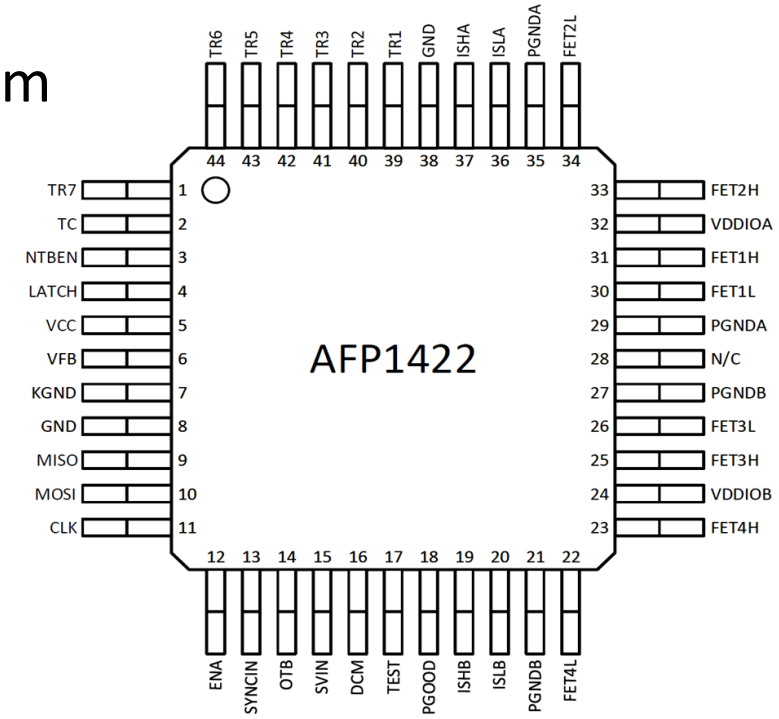

AFP1422 AKA "Jensen" PWM power controller already meets many of the hardest requirements

- Capable of controlling four transistor phase shift bridge
- Able to implement more complex power sharing algorithm
- High immunity to single event effects
- High immunity to TID induced drift

Already Implemented

ROM code change

Requires minor design change

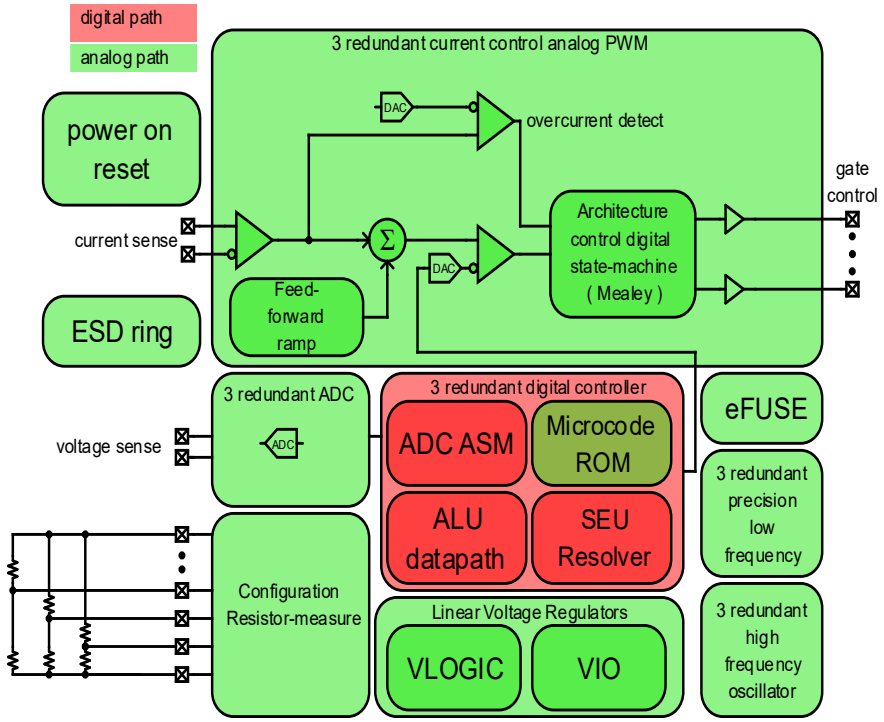

Minimal spin of AFP1422 AKA "Jensen" power controller will meet all requirements

- Requires removal of current sense from PWM control, adjustment of gains
- Requires a change in the Mealey state machine that controls the FETs to implement phase shift
- Requires change in ROM code that implements control algorithm to implement power sharing phase shift

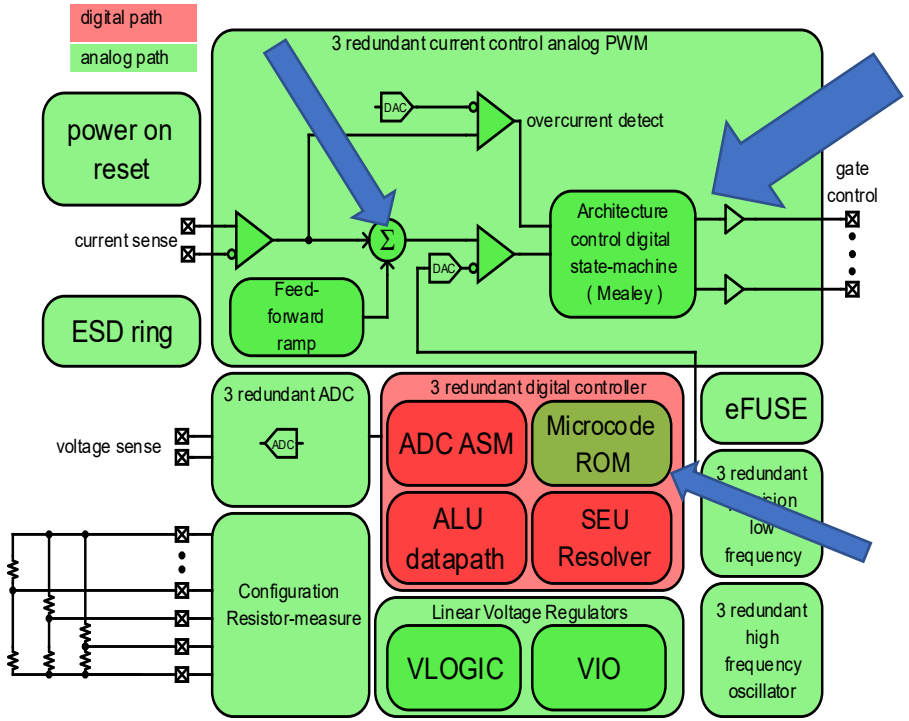

Current status:

- ROM code conversion of algorithm implementation from general purpose floating-point DSP to Jensen custom rad-hard enhanced fixed-point DSP is complete.
- First pass of Mealey state machine modifications already implemented.
- Expect tapeout of first pass complete prototype power sharing phase shift controller in Q2 2023

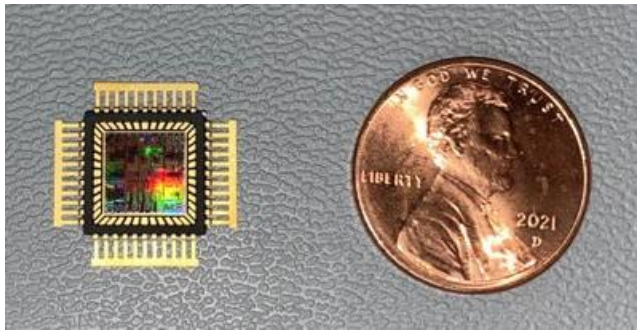

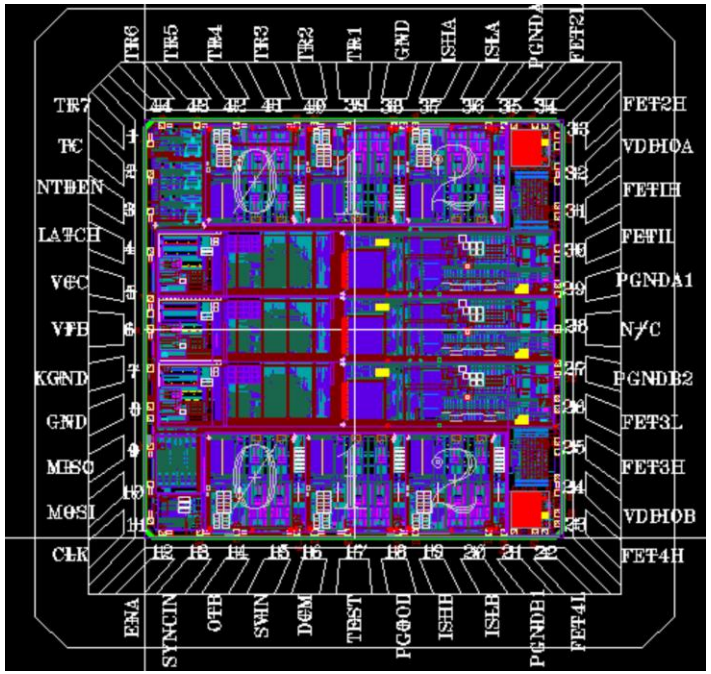

Acknowledgements

- NASA GRC
- NASA STMD
- JPL

Thank You