HYBRID BATTERY SUPERCAPACITOR

Robert C. Hon
roberthon@wecoso.com

Carl S. Kirkconnell
carlk@wecoso.com

West Coast Solutions
Huntington Beach, CA

The West Coast Solutions Hybrid Battery Supercapacitor (HBS) is a revolutionary new technology which combines the high power advantages of a supercapacitor with the storage benefits of a battery for higher power with a smaller size and mass than traditional batteries. HBS, typically used as an auxiliary power source charged off the main bus, is enabling a new generation of high power payloads on SmallSats by providing 700 W of sustained power from a compact 1 U hybrid battery. Targeted applications include synthetic aperture radar (SAR), advanced propulsion technologies, lasercom, high data rate downlink transmitters, large array infrared sensors, and directed energy.

- High-power density battery for SmallSats
- High reliability, radiation tolerant space design
- 150 Wh energy and >700 W power in a 1U form factor
- Cycle life > 30,000
- Scalable for higher energy and higher power

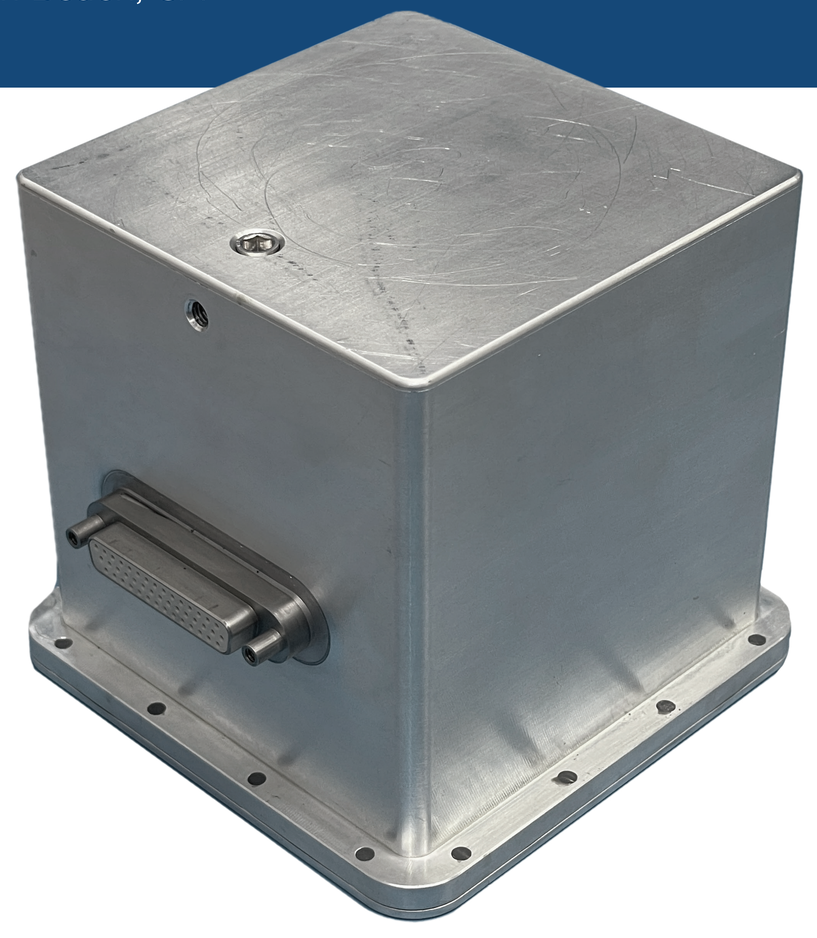

SPECIFICATION	VALUE
Operating Voltage	17.6-33.6 V
Capacity	5 Ah
Energy Storage[1]	150 Whr @ 0.2 C charge/discharge
Cycle Life[2]	> 30,000 cycles
Charge Rate	1 C up to 95% State of Charge at -20-35 °C
Discharge Rate[3]	5C down to 15% State of Charge at -20-35 °C
Maximum Continuous Current	25 A
Module Mass	1.65 kg
Module Volume	10 cm X 10 cm X 10 cm (1 U)
Energy Density	91 Wh/kg
Power Density	> 424 W/kg
EMI/EMC Standards	Meets or exceed MIL-STD-461F and MIL-STD-462
Applied Random Vibration	GEVS-compliant (14.1 grms)
Shock	Peak shock level 1210 g (900 Hz to 10 kHz)
Operating Temperature	-20-45 °C
Storage Temperature	-20-55 °C
Total Ionizing Dose	15 krad (Si)
EEE Parts	EEE components shall meet or exceed EEE-INST-002 Level 2

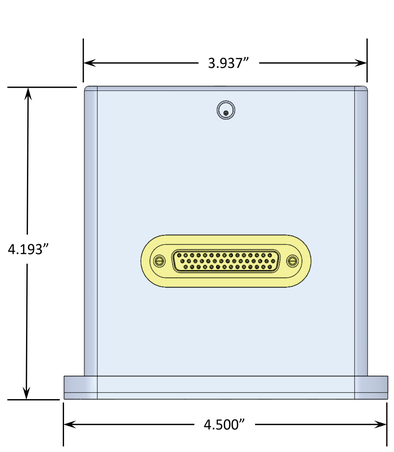

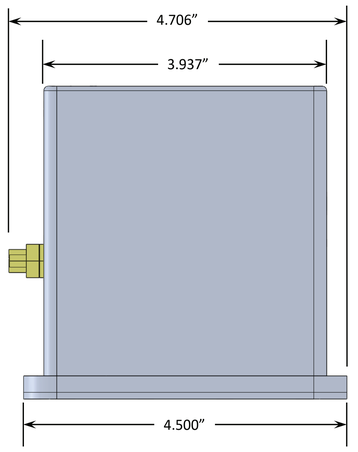

1 The HBS provides the specified energy storage at Beginning of Life based on a 0.5 C charge and discharge across thermal interface temperatures -5-45 °C

2 The HBS retains at least 80% of its Beginning of Life Energy Storage capacity after the specified number of cycles under the following operating conditions:

- Charge and discharge cycles between 40% and 90% State of Charge
- Charge and discharge rate of 0.5 C with 1% of the uniformly-distributed cycles occurring at 5 C discharge
- A thermal interface temperature of 25 °C

3 2 C discharge down to 15% State of Charge safe at extended temperature range of -20-45 °C

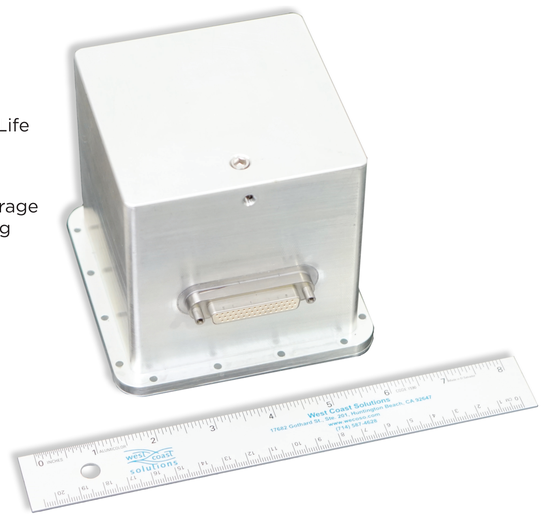

West Coast Solutions is seeking industry partners to help us commercialize this technology with appropriate applications.

info@wecoso.com | 714-222-0424 | www.wecoso.com