CRISA

Airbus Crisa

Generic **H**igh **P**ower **S**ystem (**GHPS**): The Standard for Human Exploration

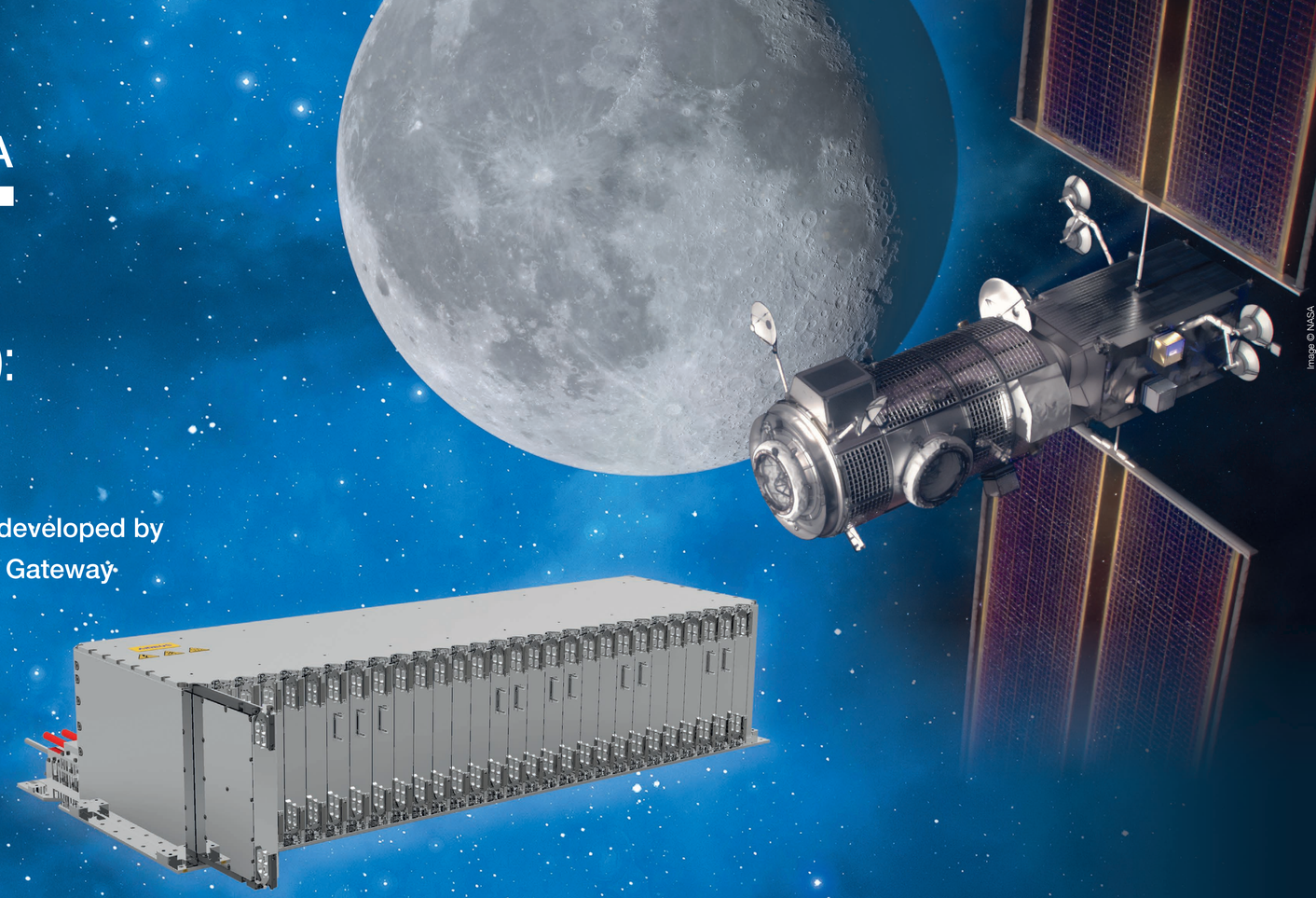

- GHPS (Generic High Power System) is the standard for crewed missions developed by Airbus Crisa in collaboration with Northrop Grumman for the NASA Lunar Gateway
- Scalable power solutions for 120V platforms compliant with NASA standards for crewed missions
- Efficient, isolated, bidirectional power conversion
- Programmable digitally controlled Power Converters
- Protected power distribution at 120V and 28V
- In-flight replaceable cards
- Modular approach based on standard building blocks

Card name	Description	Function group
BCDR	Isolated **B**attery **C**harge and **D**ischarge **R**egulator	CONVERSION
BRM	**B**us **R**egulator **M**odule: bus quality and control parameters management	
ISODCDC	Multipurpose bidirectional fully digitally controlled **ISO**lation **DC/DC**	
PDC	Digitally controlled **P**ower **D**own **C**onversion from 120V to 28V	
SUPS	**S**tandard **U**ser **P**ower **S**ervices: independent power supplies for crew usage: 4 x programmable Low Voltage outputs (3-28V) and 4 x High Voltage outputs (120V)	
APR	**A**rray **P**ower **R**egulator: Direct Energy Transfer under development, Maximum Power Point Tracker in roadmap.	
CTRL-APS	**C**on**TR**o**L** and **A**uxilary **P**ower **S**upply: TM/TC based on Ethernet, and centralized auxiliary power supply	CONTROL
PBS 120V	**P**rimary **B**us **S**witch: solid state based 20A to 165A programmable bidirectional latching current limiter	DISTRIBUTION
X-TIE	Cross-strapping link between primary power buses	
PDS 28V & 120V	**P**ower **D**istribution **S**witch: solid state based latching current limiter for spacecraft users	
BES 28V & 120V	**B**us **E**nable **S**witch: cross-straping link between secondary power buses	
HCM	**H**eater **C**ontrol **M**odule: heater drivers upstream protected in groups by latching current limiter	

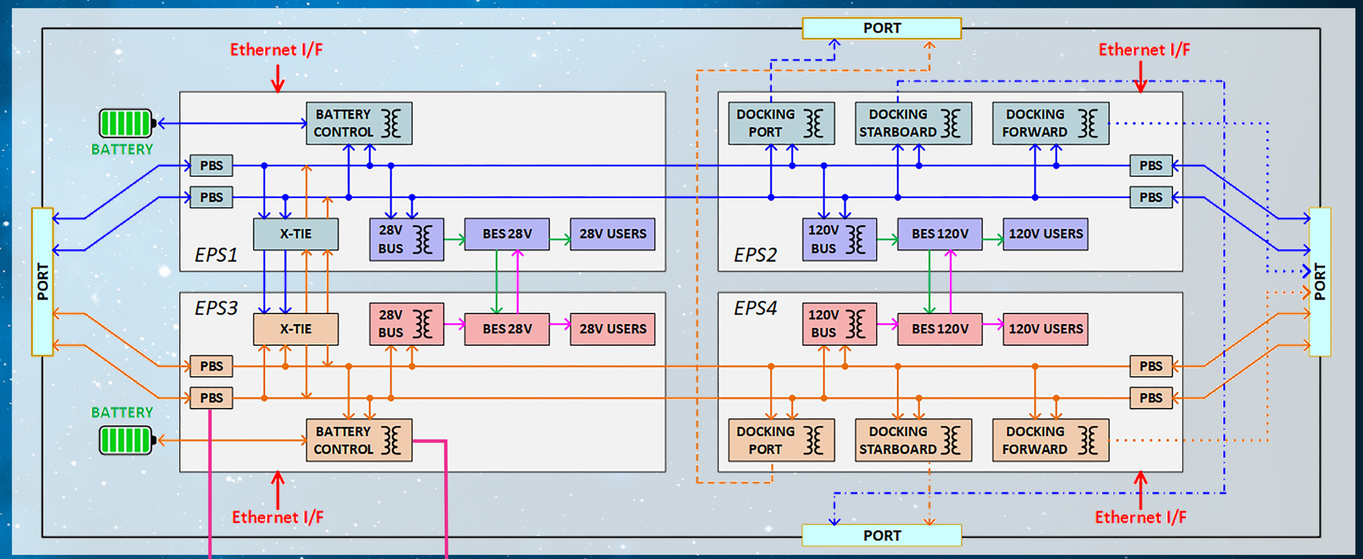

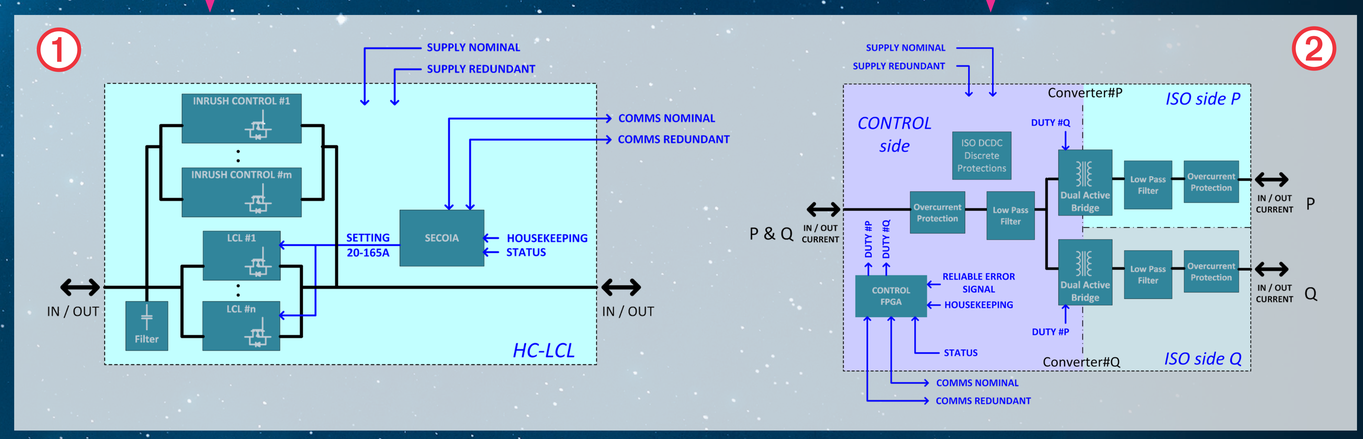

1

PBS 120V: Primary Bus Switch 120V

- ✔ Provides Latching Current Limiter (LCL) functionality with current limitation configurable between 20 and 165A.
- ✔ Based on N-channel MOSFETs.
- ✔ Switching, protection and failure isolation for primary bus
- ✔ Start-up logic and inhibit hardlines.

2

ISODCDC: Multipurpose bidirectional fully digitally controlled ISOlation DC/DC

- ✔ Power Capability: 3 kW per card.
- ✔ Max input / output current: 25A per card.
- ✔ Voltage range in both sides: 98-136 V.
- ✔ Digital control and configuration with a dedicated reprogrammable FPGA.
- ✔ Supports multiple grounding schemes configurable at unit level.

NORTHROP GRUMMAN

AIRBUS