

Reconfigurable Electronics for Aerospace Power (REAP)

David Caldwell, Christopher Le,
Vien Vu, Sunny Yu,
Michael Willhoff, Hung Ngo
Electronics Engineering Subdivision

2023 Space Power Workshop

Approved for public release. OTR 2023-00628.

© The Aerospace Corporation, 2023

Outline

- Challenges & Solutions in Space Power
- Conceptual Overview of Reconfigurable Electronics
- Implementation of Turnkey Power Education Kit
- Example Applications of Turnkey Power Subsystem
- Next Steps to REAP Rewards

Patent Pending

Challenges & Solutions in Space Power

Space industry demand for reduced development cycles

- Challenges
  - *Long costly development cycles due to discovery in unique designs (sometimes an update to a heritage product without full understanding of initial design)*
  - *Off-the-shelf (OTS) power converters save time for simple demands but lack features for dynamic applications*
  - *Advancements hindered by narrow focus on specific product enhancements, rather than leveraging technologies across disciplines to improve overall design efficiency*

- Solutions
  - *Reconfigurable Electronics for Aerospace Power (REAP) is a turnkey concept that satisfies multiple applications with minimal resource burden (trusted building blocks)*
  - *Turnkey power education kit is a tool for interactive development of critical skills across power, control and digital disciplines to engage and elevate engineers*

Educational kit advances engineering skills that advance technological growth

Conceptual Overview of Configurable Electronics

Space product design burden exceeds recurring costs

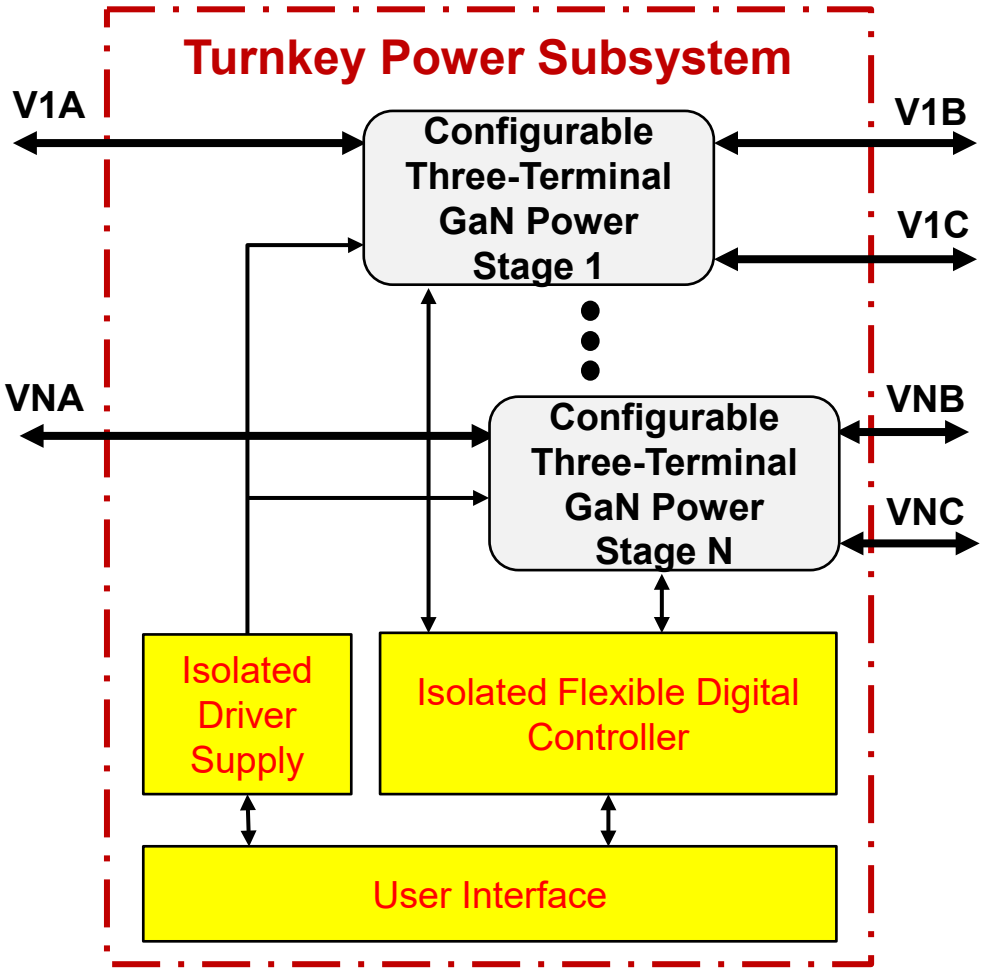

- Turnkey power subsystem
  - *GaN for small size and high efficiency with fast switching & low-loss conduction*
  - *Configurable three-terminal power stage for multiple energy conversion topologies*
  - *Flexible control adapts to various applications without programming (software customization optional)*
  - *Interface electrical isolation*
    - Full duty cycle conduction
    - Broad range of connections
- Feature set enables new and useful quick-turn applications

Acceptable performance of proven product is advantageous over new development

Technology Growth Enables Turnkey Power

Configurable power stages with isolated interfaces

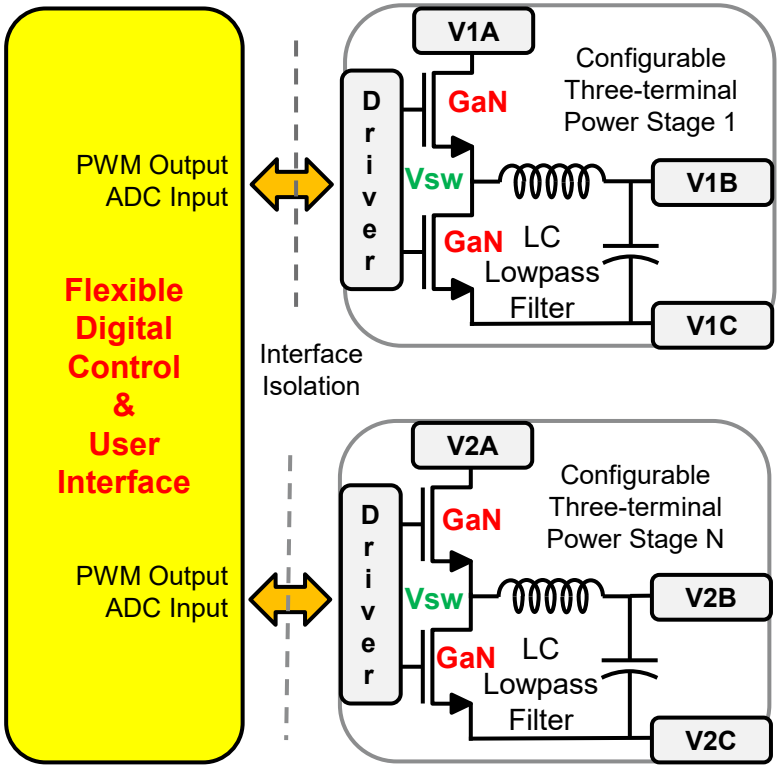

Acronyms: Analog Digital Converter (ADC), Pulse Width Modulation (PWM), Gallium Nitride (GaN)

- Isolated GaN filtered half-bridges
  - *Independent, parallel, series or complementary connected stages*
  - *Buck, boost, buck-boost (inversion), buck-or-boost (up or down), full-bridge, three phase*
  - *Bipolar voltage & bidirectional current*
- Flexible easy-to-use digital controller
  - *Voltage, current, power, non-linear ,and external system parameter control*
  - *User interface options without programming*
    - Pin selectable (logic / resistor settings)
    - Serial or PC interface options
- Potential application examples
  - *Wide range of power conversion variations*
  - *Process controls: RF, actuator, thermal, solar, battery and sequential management*

Flexible control with selection of pre-programmed algorithms

Implementation of Turnkey Power Education Kit

Detailed design choices based on expediency for proof-of-concept

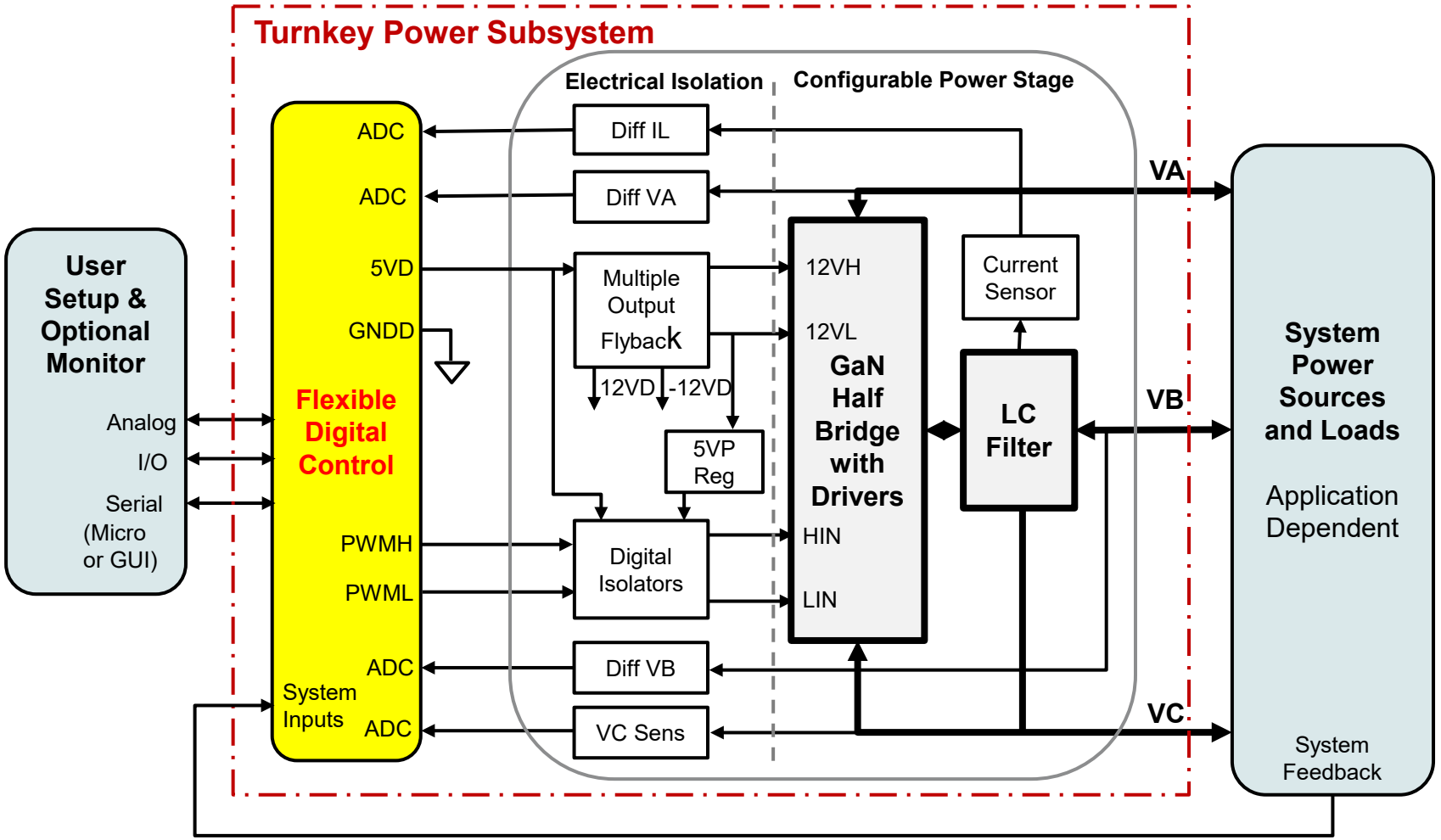

Modular approach with separate controller and stackable power boards

Turnkey Power Education Kit Modularity

Leverage OTS microcontroller and integrated GaN half-bridges

- Flexible digital controller
  - *Low-cost microcontroller development board with built-in programmer & debugger*
  - *Microcontroller optimized for power control applications*
- Configurable GaN power stages
  - *Aerospace designed power stages plug directly into microcontroller board*
  - *GaN integrated half-bridges with built-in gate drivers*

GaN Power Stages

Plug-in stackable (2 boards)

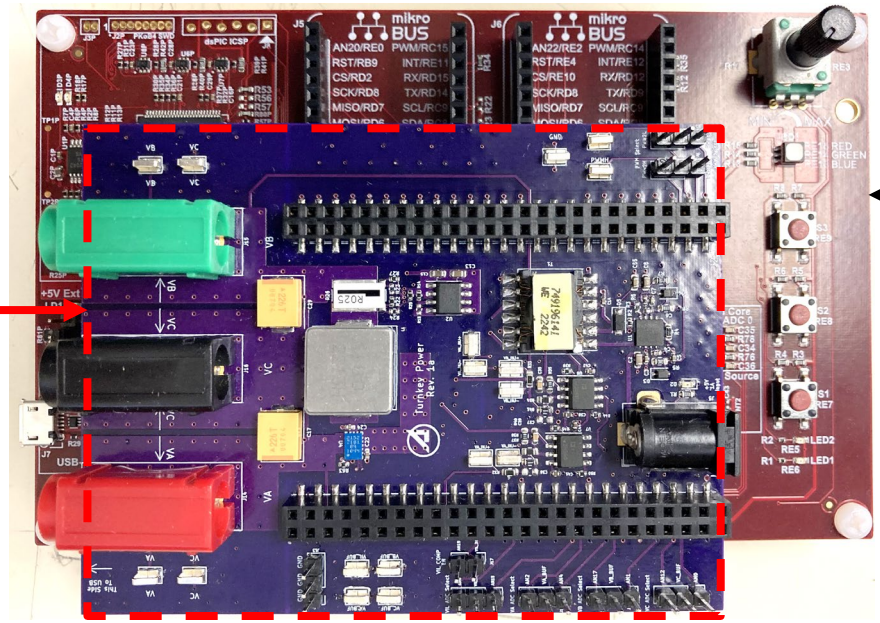

Commercial Microcontroller Development Board

Design updated for producibility from initial isolated GaN power stage used to characterize operation in lab (scope waveforms)

Practical tool that engineers can use in lab, office or home

Example Applications of Turnkey Power Subsystem

Half-bridge enables bidirectional operation

Buck: Step-down

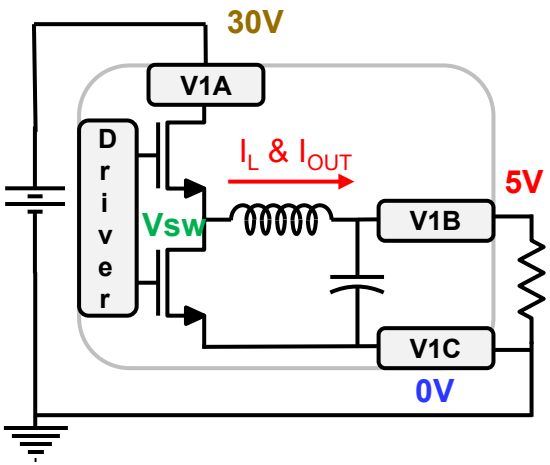

Boost: Step-up

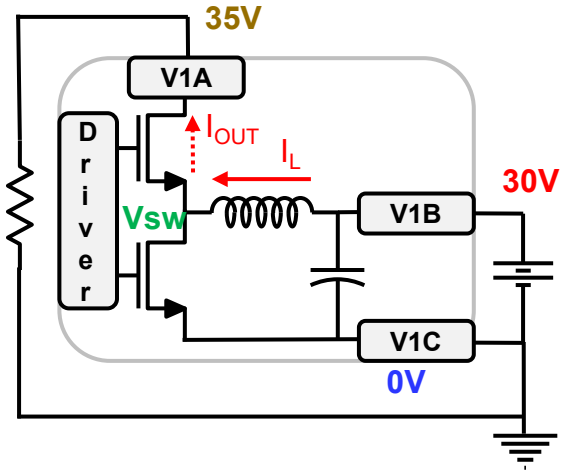

Buck-Boost: Inverting

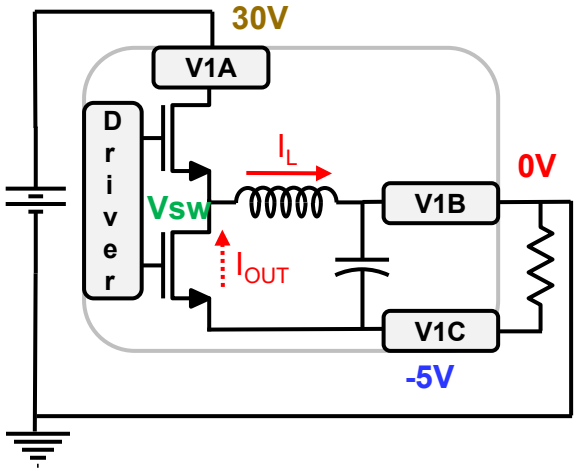

Buck Switching Waveforms

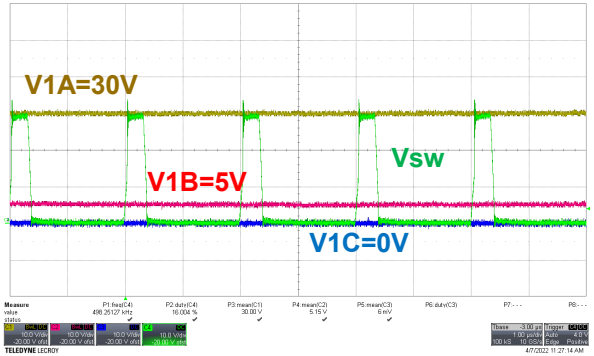

Boost Switching Waveforms

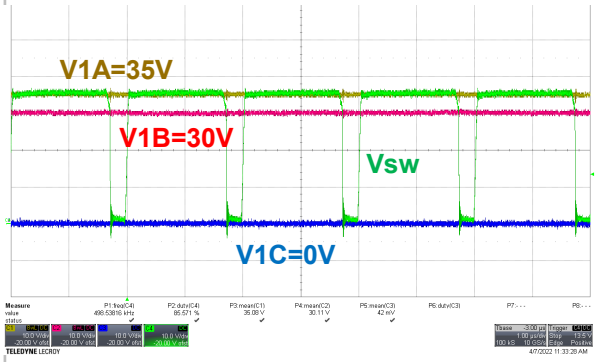

Buck-Boost Switching Waveforms

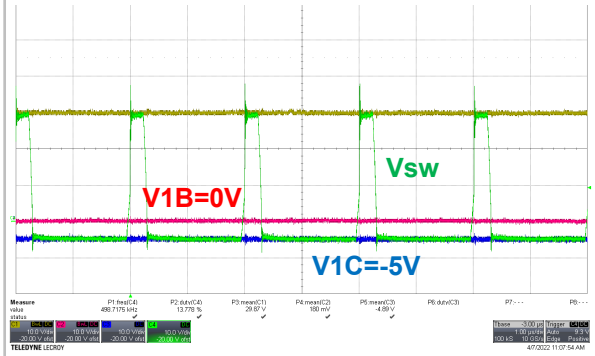

Isolated interfaces enable multiple applications

Multiple Mode Power Optimization Example

Automatically apply buck or boost or direct energy transfer (DET)

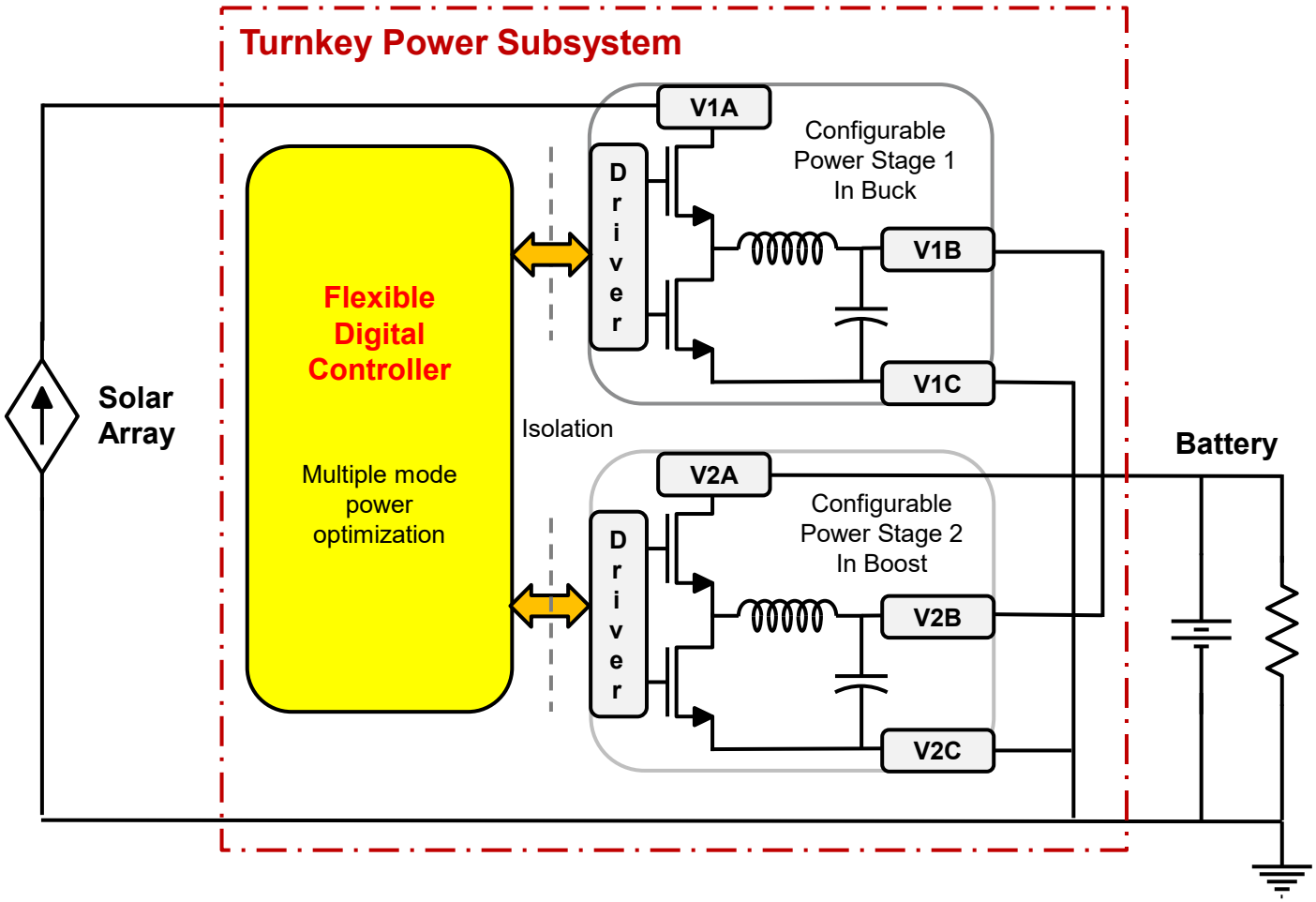

Reference: Aerospace Patent 9,099,759 “Multi-mode Power Module”

Battery charging optimized over varying operational conditions

Fault Tolerant Scalable Power

Droop regulation with feedforward and proportional control

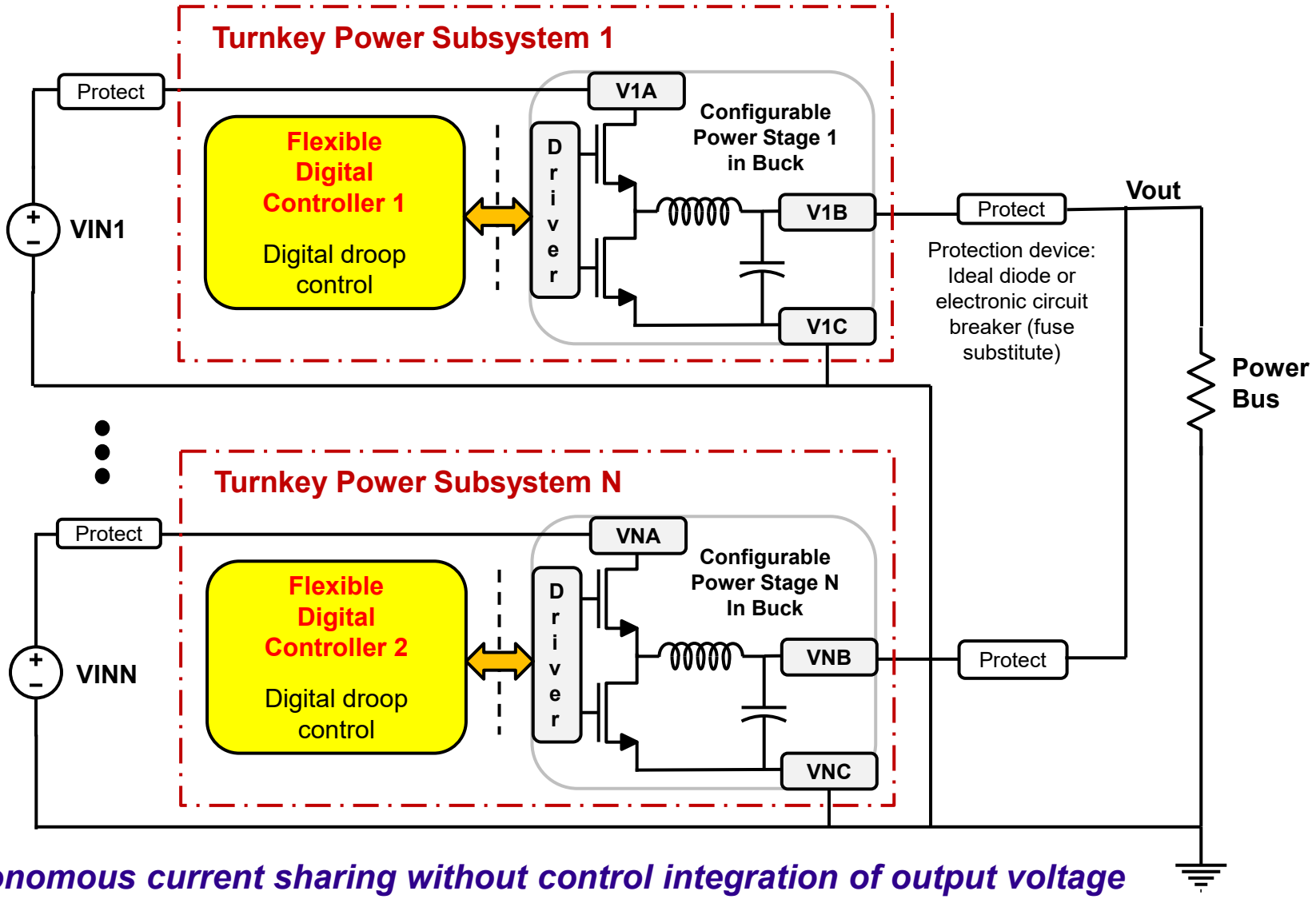

Autonomous current sharing without control integration of output voltage

Next Steps to REAP Rewards

Apply educational tools to expand critical engineering skills

- Continue investing in emerging talent
  - *Invite newer engineers to develop education kit features with veteran oversight*
  - *Demonstrate operational robustness in lab for multiple anticipated applications*

- Advance turnkey power toward flight application
  - *Mechanical packaging and electrical characterization for space environments*
  - *Consider program opportunities for technology demonstration*

Apply turnkey concepts to reduce product development cycles