

Design Integrity Guidelines (DIG) for Alternate Grade Parts (AGP) in Space Power Electronics

David Caldwell, Peter Carian, Brian Lenertz
Electronics Engineering Subdivision

2023 Space Power Workshop

Approved for public release. OTR 2023-00627.

© The Aerospace Corporation, 2023

Design Integrity Guidelines (DIG)

Alternate grade parts (AGP) in space power electronics

- Adaptive electronic development (AED) is a holistic approach for alternate grade parts (AGP) in space electronics (AGP includes components and assemblies)
  - *Leverage AGP advantages while managing risks*
  - *Continually evolve through mission iterative updates based on lessons learned*

- Design integrity guidelines (DIG) is a element of AED conceptual approach
  - *Techniques to increase robustness of designs when AGP devices are used*
  - *Desensitize functional operation to device degradation & share lessons learned*

- DIG is not a substitute for device characterization to space environment

Special thanks to Don Yang for AED vision
and Gail Johnson-Roth for DIG contributions

Good parts do not make up for bad design & good design does not make up for bad parts

Electronic Adaptive Development (AED) Concept

Leverage AGP advantages while managing risks

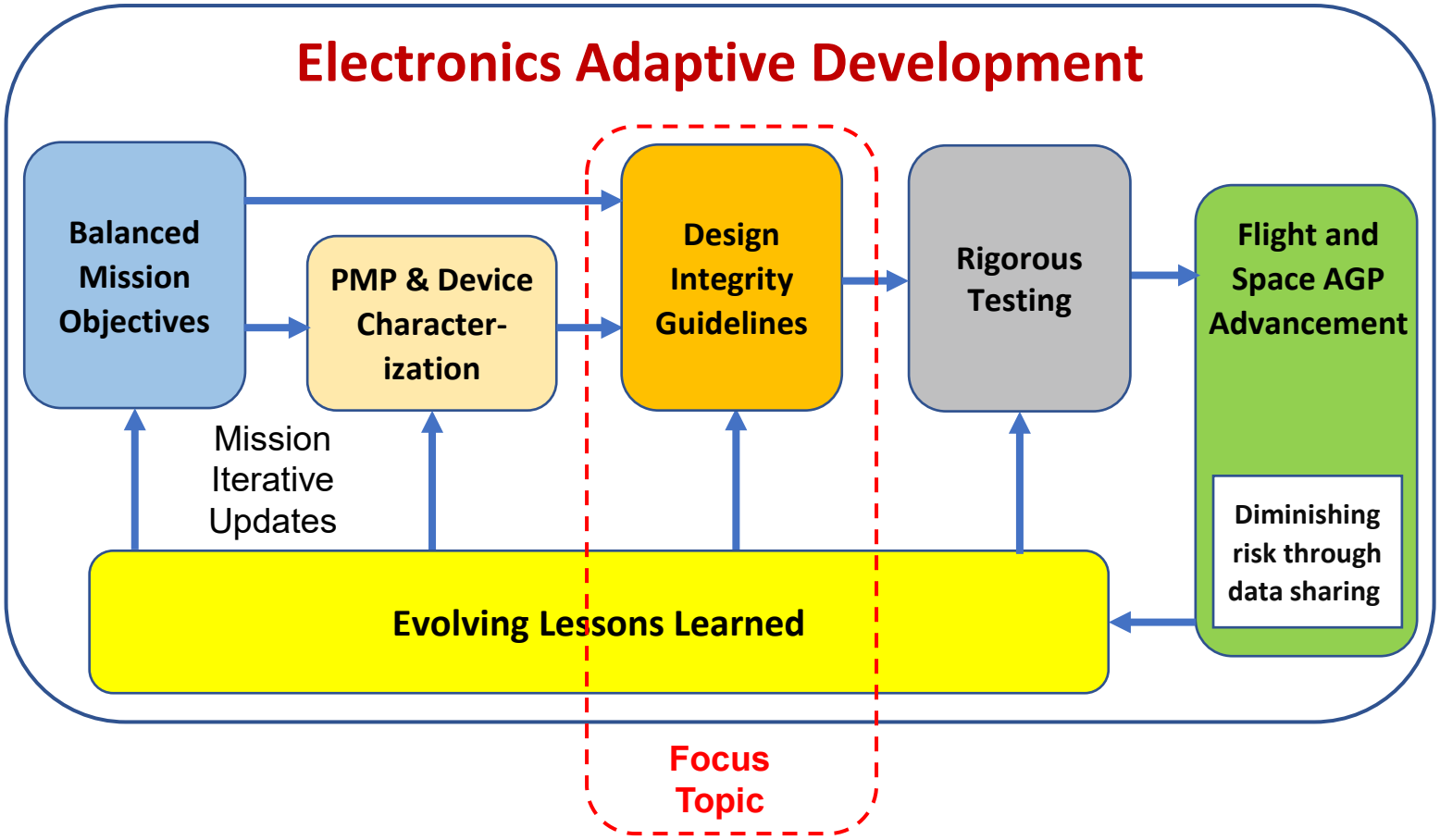

Robust & Resilient Electronics Adaptive Development (RREAD) the Future of Space Electronics

Continually evolve through mission iterative updates based on lessons learned

Evolving Lessons Learned that Apply to DIG

Satellites with AGP tend to be fast-paced low-cost programs

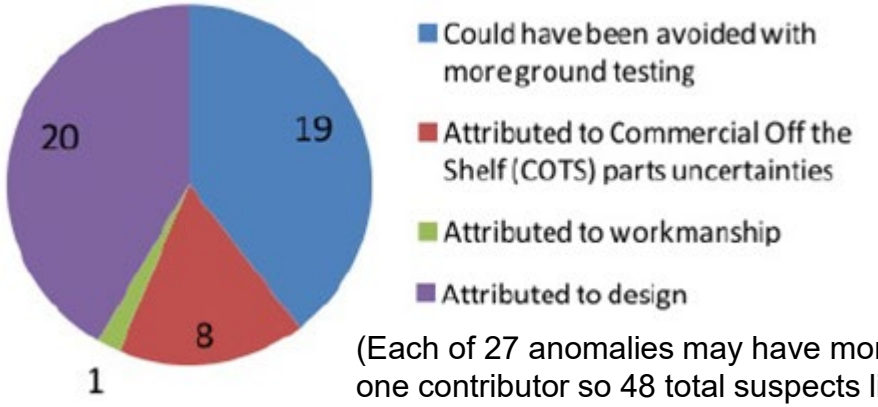

(Each of 27 anomalies may have more than one contributor so 48 total suspects listed)

CubeSat industry perspective on anomaly experience [Venturini, Ref. 1]:

- Multi-organization effort to capture lessons learned through open data sharing
- Design weaknesses (20 of 27) considerably outweighed part susceptibility (8 of 27)

Aerospace developments and learnings [Aerospace, Ref. 2]

- *Over 35 AeroCubes flown with up to seven year mission life*
- *Robust and resilient design practices include:*
  - Careful device selection, characterization and application
  - Smart fault management with modularity and protection
  - Large design margins and perceptive flight data

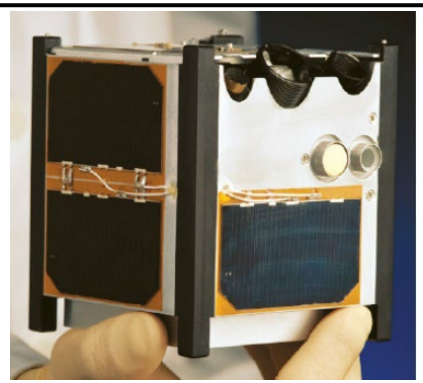

Lessons from on-orbit failures: Upscreening does not protect against a poor or sensitive design & smart use of fault-tolerance can go a long way when devices have uncertain history (paraphrased) [Leitner, Ref. 3]

Key is evolution (streamlined processes) over revolution (optimistic step skipping)

Design Integrity Guidelines (DIG) Overview

Evolution (streamlined processes) over revolution (skipping steps)

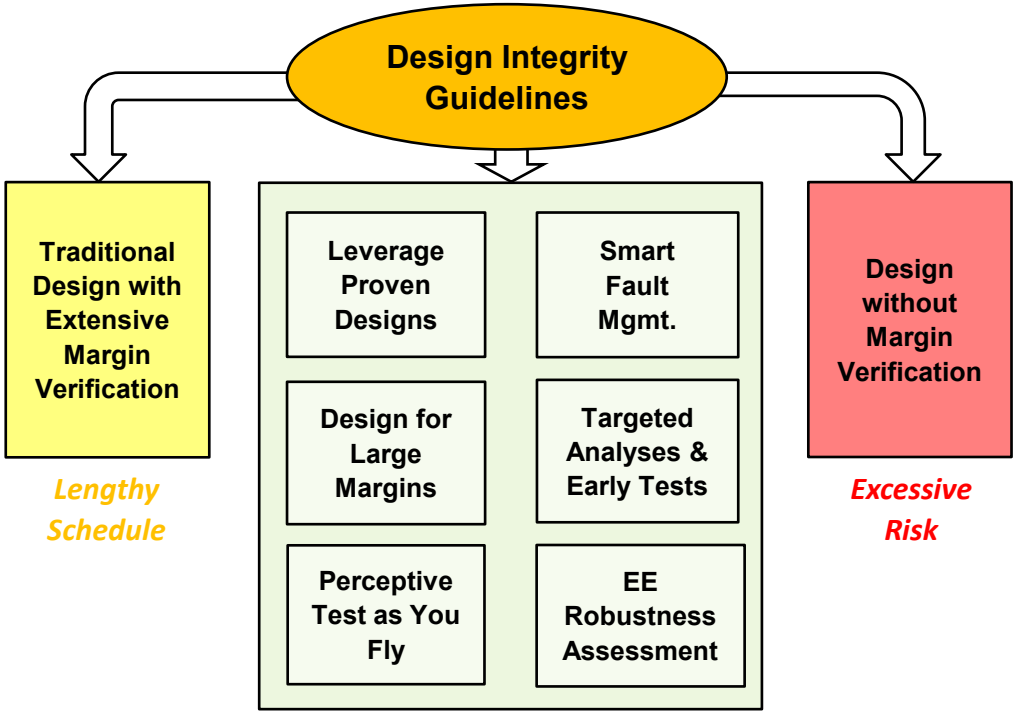

DIG prioritizes critical elements of proven approaches through balanced trades

EERA: Electrical & Electronics Robustness Assessment
SME: Subject Matter Experts

- Design Integrity Guidelines
  - *Leverage proven designs*
    - Weigh the risk that a new unique design may introduce late discovery
  - *Smart fault management*
    - Modularity with simple protections enable graceful degradation
  - *Design for large margins*
    - Design with worst case analysis in mind and avoid circuitous circuits
  - *Targeted analyses and early tests*
    - Increase intuitive understanding
  - *Perceptive test as you fly*
    - Extend lessons learned to physics of failure (PoF) to extend life
  - *EE Robustness assessment*
    - SME peer reviews on robustness rationale in time to impact design

DIG into a new EERA of AGP in Space Power Electronics

Device Selection and Application Guidelines

Resistors: Suppliers stock over 100,000 Automotive-grade resistor types
Larger physical sizes are mechanically more robust
Avoid high aspect ratios (above 3:1 L vs W) on ceramic substrates
Apply robust derating for power: less analysis, fewer surprises
Resistors will crack if placed in locations on PCBs that flex
Solder joint inspection is easier to perform with larger solder pads
Capacitors: Selection is more complex due to wide variations in type
Automotive-grade parts typically have greater design margins
Ceramic caps are generally preferred if available in size & rating
Tantalum caps have higher values but should be derated by >50%
Avoid Aluminum electrolytics: they are not sealed, with higher ESR
Caps in high ripple circuits may have internal heating issues
Placing two small caps in series can preclude failure with same function
Inductors: Must be specified to provide adequate design margins
Inductors in switching power supplies will dissipate power
Copper loss is equal to core loss when properly designed
Inductors are the heaviest of parts, so care must be taken in mounting
PN junction diodes:
PN Junction diodes have semi-log responses, with a “knee” at 0.7V
Increasing forward current through the diode resistance adds to the forward Voltage
~10nA reverse leakage current even at rated Voltage (x10 at Hi Temp)
Schottky Barrier diodes:
Schottky Barrier diodes have a lower “knee” Voltage (Vf) close to 0.2V
Lower Vf typically corresponds to higher reverse leakage current
High operating temps yield lower Vf and ~10x higher reverse leakage

Semiconductor junction transistors:
Bipolar parts do lose gain over TID exposure
Mostly immune to SEE, especially for larger sizes
50% Derate for gain, operating current, and power dissipation
MOSFET Transistors:
Gate leakage current increases over TID
Drain Voltage must be derated to 30% to avoid SEE failure
Sufficient Gate Drive and power derating can ensure long life
Medium-Scale Digital Logic ICs: Typically have large feature size
TID and SEE are not usually a threat to operation
Avoid critical timing as propagation and transitions slow with TID
Op Amps: Can degrade due to TID, especially at low-dose-rates
Avoid relying on tight leakage currents and offsets without testing
Comparators may momentarily flip their outputs under SEE
CMOS-based PWM Control ICs:
Can exhibit function degradation with TID
SEE can cause momentary output upsets, so accommodate in design
Higher order logic (memories, microcontrollers): Can and do latch up with SEE
Monitor the Supply Current, and auto-Off/On to restore function
Individual memory locations can flip due to SEE, so flush or vote.
Datasheets: Assume first page is sales pitch
Obtain latest version for specific part number and vendor used
Study every line to identify potential shortcoming for specific circuit

Robust Circuit Design Guidelines

General design considerations:
Chose the simplest solution that works for the application
Select parts with sufficient radiation data and/or flight history relative to mission objectives with option to add local shielding (aluminum or thick PCB material) to reduce the effective mission dose
Leverage AGP advantages with feature-rich parts that ease adaptability to future applications
Leaded parts to ease inspection and potential rework (Xray to confirm solder integrity if beneath part)
Standard footprints to enable drop-in replacements from multiple manufacturers
Minimize hand assembly and wiring with automated parts installation and prefabricated cables
Leverage proven designs:
Heritage hardware and standard interfaces over unique designs when possible
Known performance reduces technical challenges, time, cost and risk
Leverage COTS with well-established feature-rich parts to reduce escapes by minimizing new design
Consider limitations of previous analyses and tests as potentially restricted to the original application
Design for large margins:
Conservative parts derating supported by parts stress analysis
Design with worst case analysis in mind to avoid circuitous circuits with subtle susceptibilities
Obtain sufficient confidence through back of the envelope calculations when in-depth analyses not feasible
Digital example: Ample timing margin to reduce sensitivity to performance shift in space environment
Analog example: Low impedances in op-amp and transistor circuits to reduce degradation effects

Smart fault management:
FMECA to identify SPFs in critical circuits; add series or parallel parts to mitigate
Fault management with selected redundancy of critical functions
Graceful degradation as an option over full redundancy (e.g. parallel power sources with fault propagation protection)
Protection circuits: current limiting and over/undervoltage detection with automatic power cycle, watchdog timers and error detection with automatic reset
Targeted Analyses & Early Tests:
Prioritize targeted analyses and tests of critical parts and circuit functions prior to detailed design
First order analysis and breadboards or vendor demo kits can avoid late discovery in subsystem or vehicle test or flight
Intuitive understanding of key parameters in early phases minimizes subtle design deficiencies
Perceptive Test:
Leverage COTS advantages with feature-rich parts to monitor key parameters through telemetry
Observe part and circuit performance rather than pass/fail criteria in higher level operations
Enable physics of failure lessons by recording key parameter shifts over test conditions and flight life
Electrical & Electronic Robustness Assessment:
Concise report to support confidence in cost and schedule risk
Promote extra consideration in design phase over empirical design-test-modify
Independent peer review by veteran contractor and government SMEs

Power Module Characterization Opportunity

Short term benefits with available and easy to apply AGP technology

- Space qualified power modules (isolated & POL) are widely used throughout satellites
- Concerns with unknown technology and derating in AGP power modules
- Radiation testing of power modules and protection parts from multiple manufacturers Electrical test of the more radiation tolerant power modules with protection circuits
  - *Modularity potential*
  - *Fault insertion*
  - *Accelerated life*
- Perceptive test while you fly capability to extend lessons learned for data sharing
  - *Power converter functionality far past piece part out-of-spec degradation [MDPI, Ref.4]*

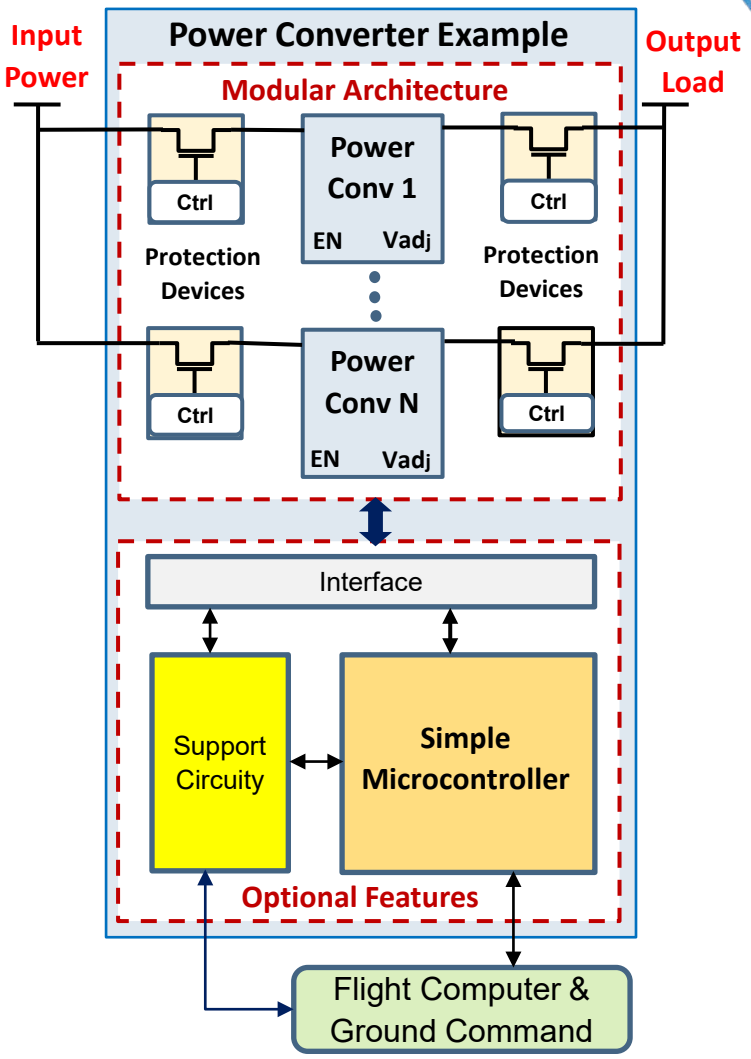

Long term benefits with perceptive test as you fly for flight characterization sharing

Space AGP Advancement

Sparse data is limiting factor in application of AGP in space

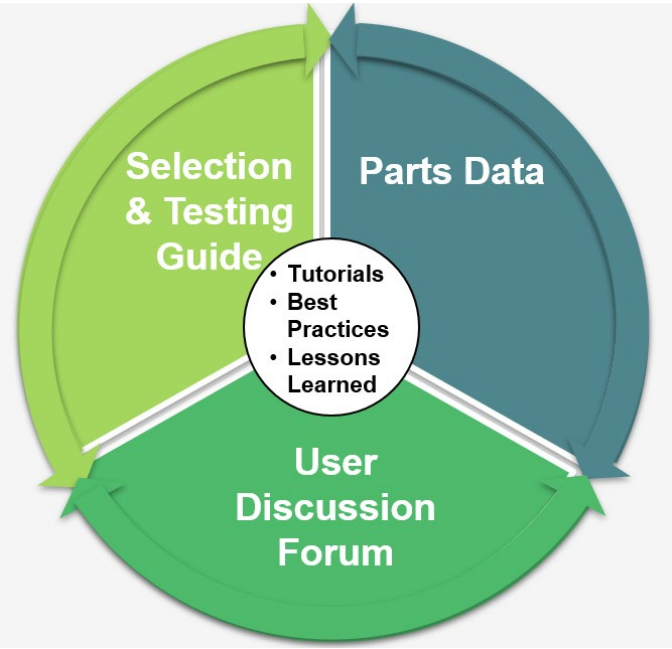

PMPedia is one part of an industry AGP database collaboration:
www.PMPedia.space
[Yarbrough, Ref. 5]

- Data collection, analysis and sharing is not limited to radiation tests
  - *Operational data from test and flight provides insight into physics of failure (PoF)*
  - *AGP electronic assemblies carry risk with unknown technologies and derating*
- Motivation for contractors and vendors to share data remains a challenge
  - *Data sharing benefits all members of industry*
  - Proprietary design details not required to convey device environmental limitations
- Multi-organizational collaboration is required to craft a realizable path forward

  [Yarbrough, Ref. 6]: Not all AGP device fit all missions so characterization remains critical

Sharing data and lessons across space industry is critical to iteratively diminish risk

References

Appreciation to our valued data sharers

1. Venturini, "Improving Mission Success of CubeSats," SSC18-IV-02, 32nd Annual AIAA/USU Conference on Small Satellites, The Aerospace Corporation, July 2018.
2. Aerospace, "Aerospace's AeroCube Program," Press Release, August 2021.
3. Leitner, "Some not-so-intuitive lessons from key on-orbit failures and anomalies since 2005," NASA, May 2021.
4. MDPI, "Comparison of the Total Ionizing Dose Sensitivity of a System in Package Point of Load Converter Using Both Component and System-Level Test Approaches," doi.org/10.3390/electronics10111235, May 2021.
5. Yarbrough, "PMPedia: A Crowd-Sourced Alternate-Grade Electronics Space Radiation Knowledge Repository," OTR-2020-00038, The Aerospace Corporation, November 2019.
6. Yarbrough, "Alternate Grade Electronics-Based Card, Slice and Unit Level Characterization Considerations –Decision Flow Concept," OTR-2022-00670, The Aerospace Corporation, April 2022.

Robust and resilient design techniques mitigate uncertainties with AGP devices