Batteries for Space Applications

Presenter: Baljit S. Riar & Michael Futrell

Authors: Baljit S. Riar[1], Robert Darling[1], Parag Kshirsagar[1], Michael Futrell[2]

[1]Raytheon Technologies Research Center

[2]Collins Aerospace

Unrestricted Content, approved for public release

RTRC
Raytheon Technologies Research Center

Collins Aerospace

Space Batteries

- Provides power:
  - Deployment of solar panels, firing pyros and rockets for altitude control
  - During solar eclipse periods
  - Load management and peak shaving for lunar grids

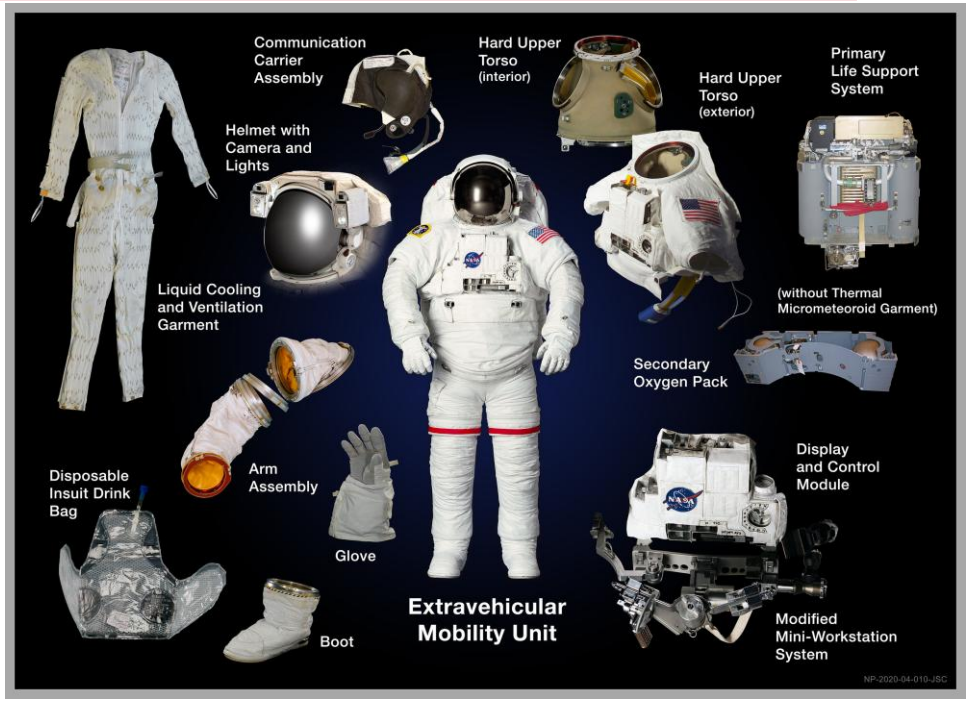



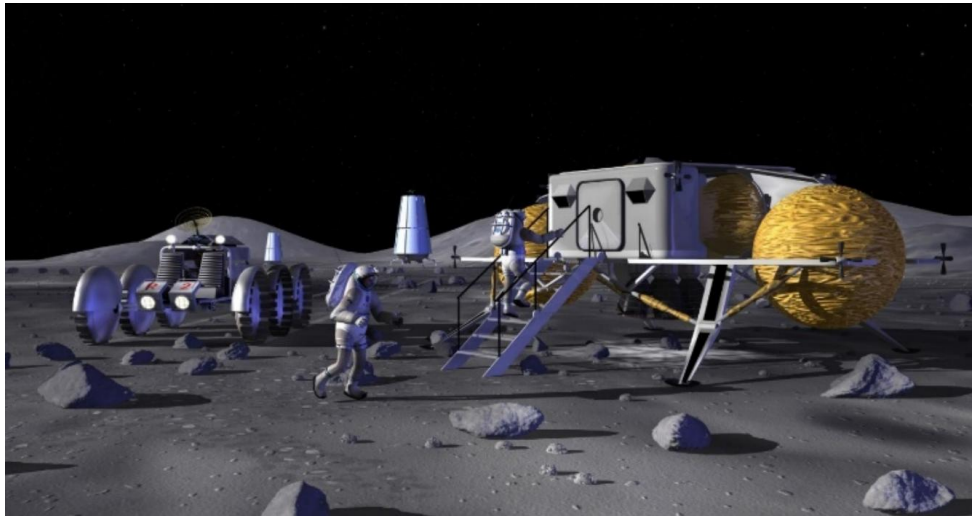

Image taken from: https://images.nasa.gov/

RTRC
Raytheon Technologies Research Center

Battery Requirements

- High safety and reliability especially when tied with human exploration missions

- Mission specific needs:
  - Orbiter mission of Venus has similar temperature as Earth
  - Surface temperature of Venus is 450°C, and lowest on Mars is -125°C near poles
  - High radiation e.g. 4Mrad for Jupiter environments
  - Life of the mission: Orbital, lander, rover has their own needs

Modular Battery Pack

- Modules in series and parallel

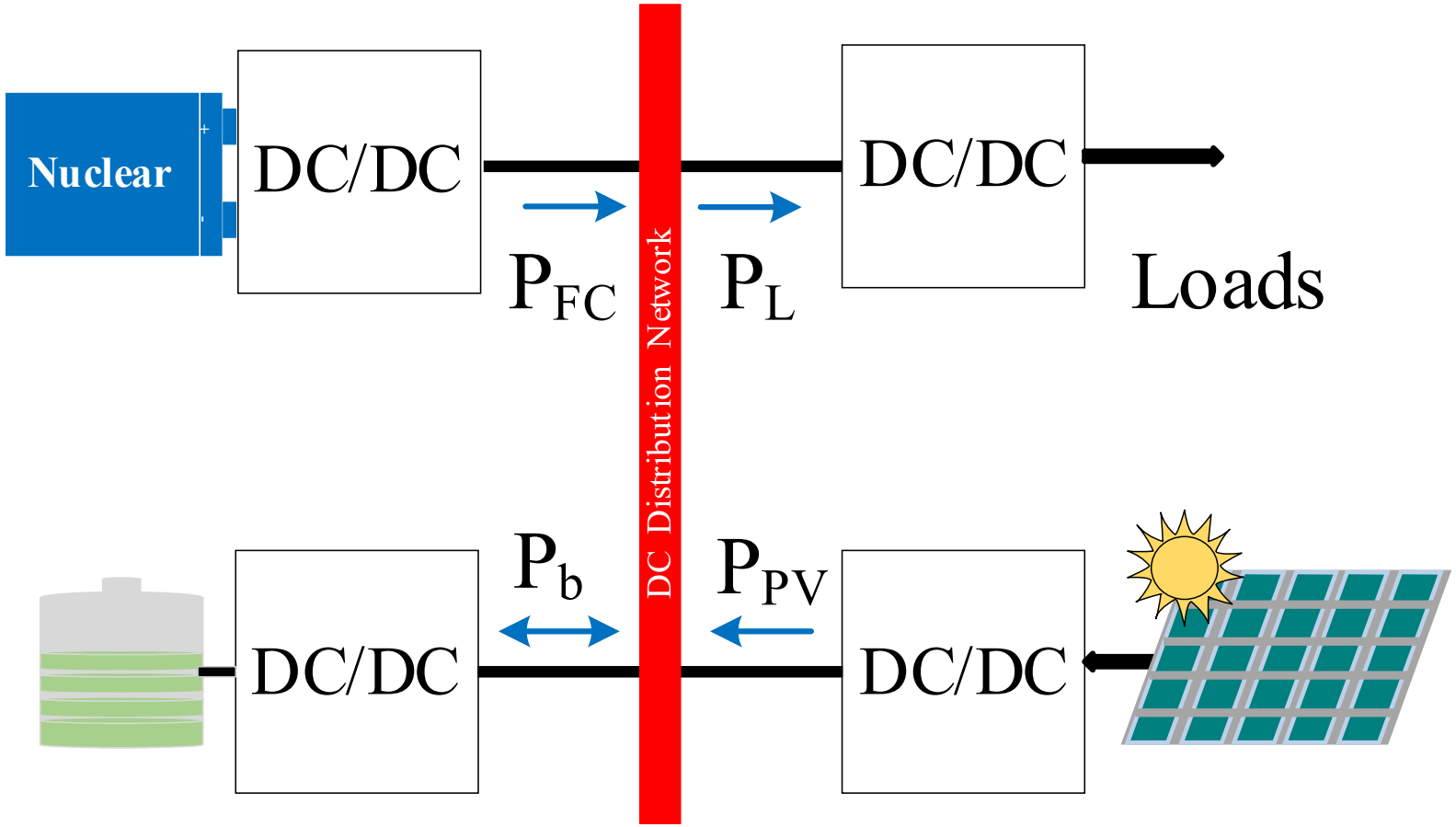

Microgrid architecture

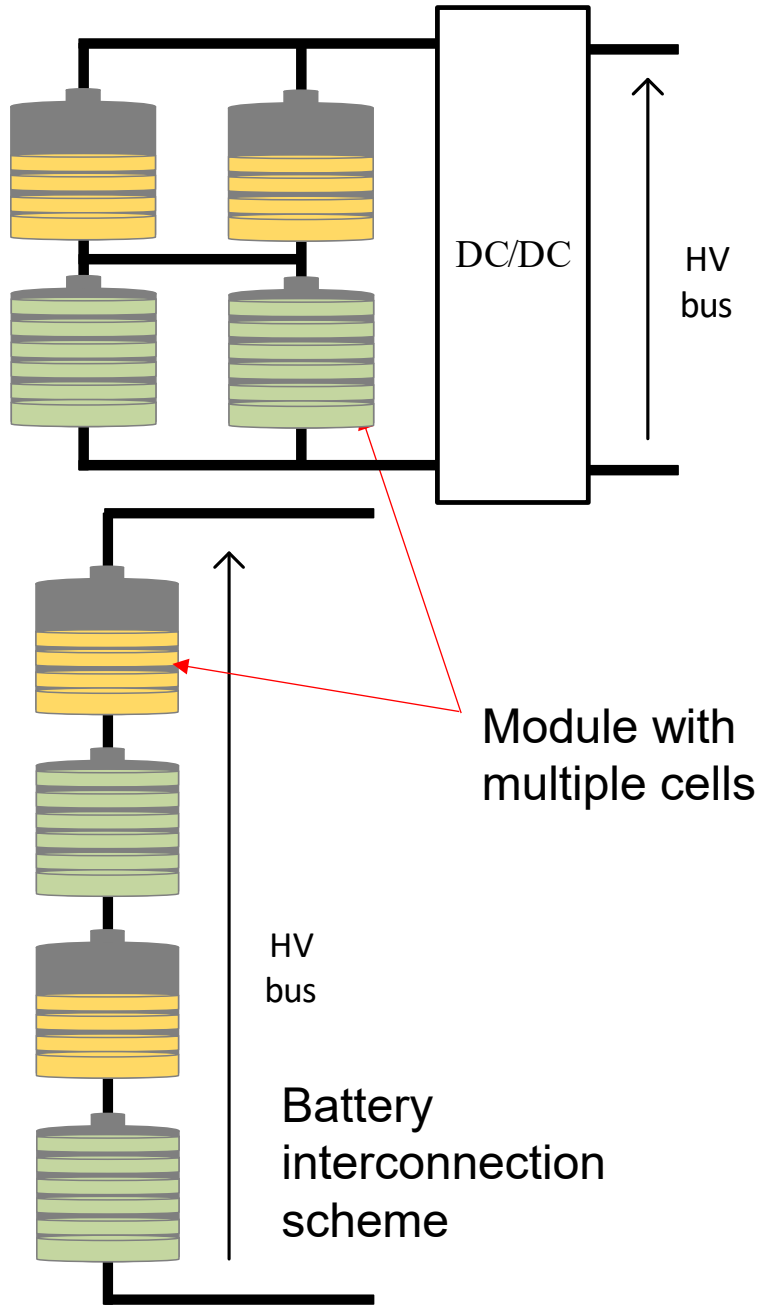

RTRC
Raytheon Technologies Research Center

Battery Degradation

- Dominant mechanism: SEI formation and growth, Lithium plating, current collector corrosion, electrolyte decomposition, electrode facture, SEI fracture
- Observable effects at terminals:
  - Increase in resistance
  - Decrease in Capacity

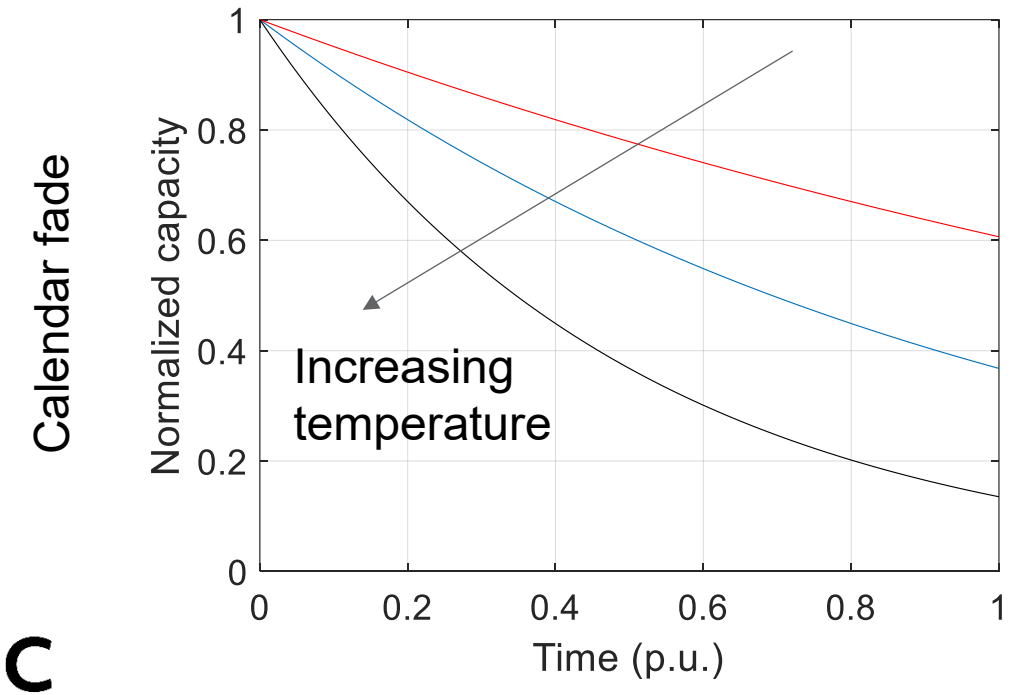

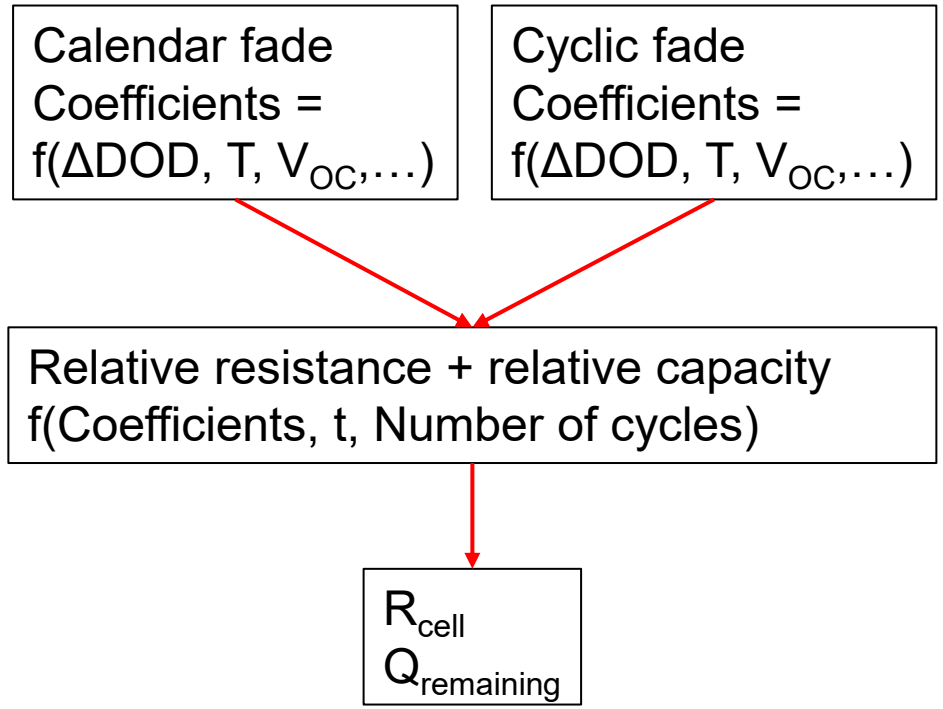

Kandler Smith et.al., Optimizing Battery Usage and Management for Long Life, 2016

RTRC
Raytheon Technologies Research Center

Life Extension

- Active balancing
  - Power exchange among modules
  - Life extension
  - High efficiency

30% to 45% extension in life or a smaller battery pack

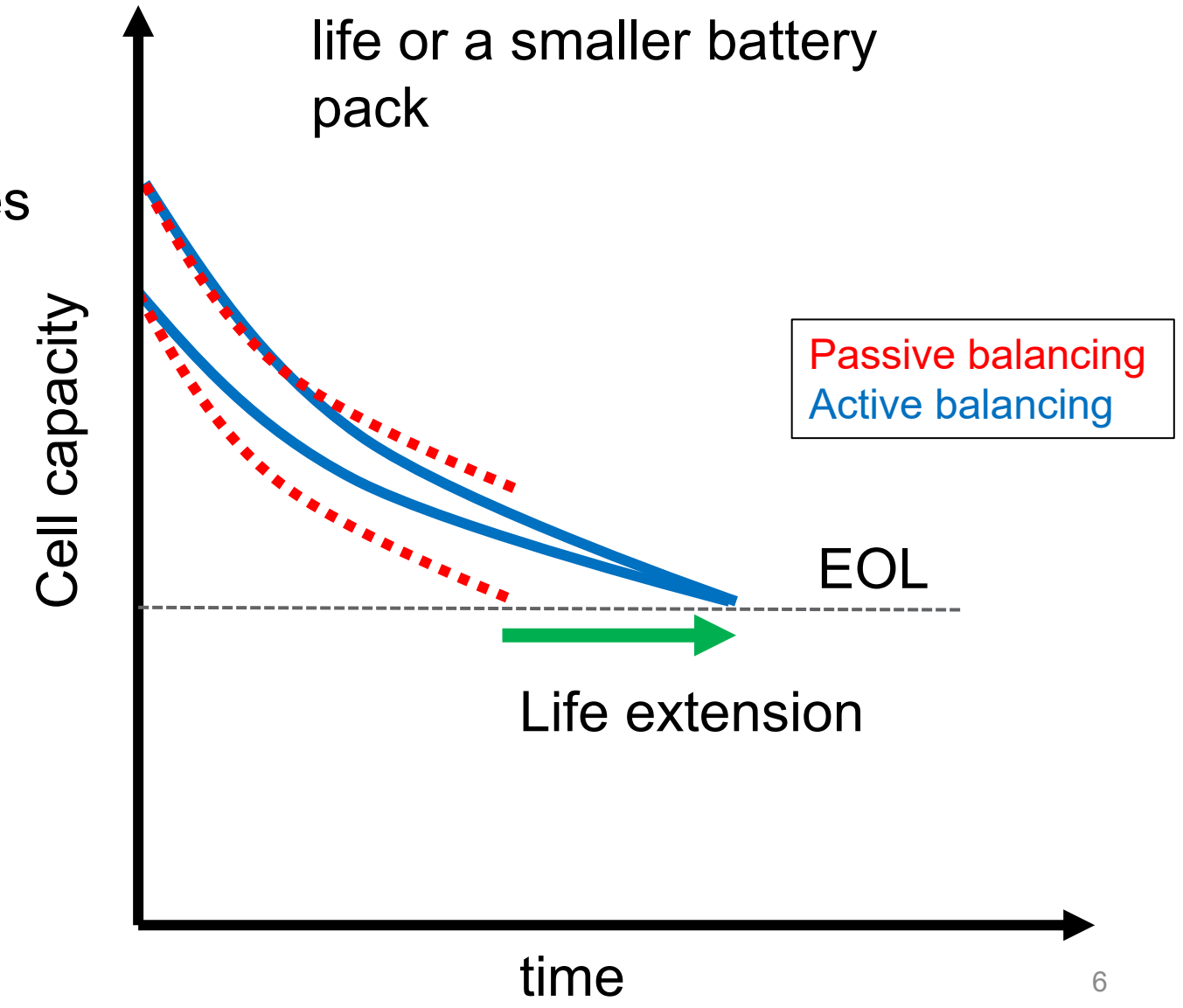

RTRC
Raytheon Technologies Research Center

Capacity Loss Due to Radiation

- Some capacity loss from gamma radiation using a high dose of Cobalt-60
- All the cells tested in the study showed a higher tolerance to radiation
- In comparison to the control cells, the maximum capacity loss of < 2% occurs after 20 Mrad exposure

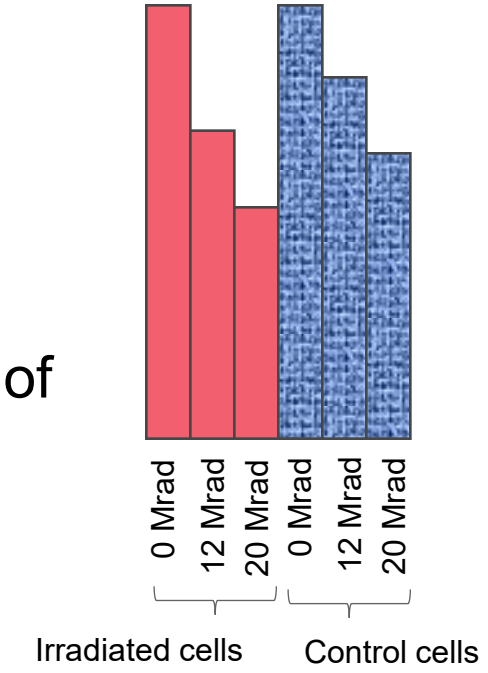

Image adapted from: Performance of Commercial High Energy and High Power Li-Ion Cells in Jovian Missions Encountering High Radiation Environments. NASA Battery Workshop November 19-21, 2019

RTRC
Raytheon Technologies Research Center

Battery Design

Inputs

Electrical load profile

Cell database

Input requirements

Pre-processing

Optimization

Battery Design Toolbox (Optimization for weight, volume, cost, life)

Post-processing

Results

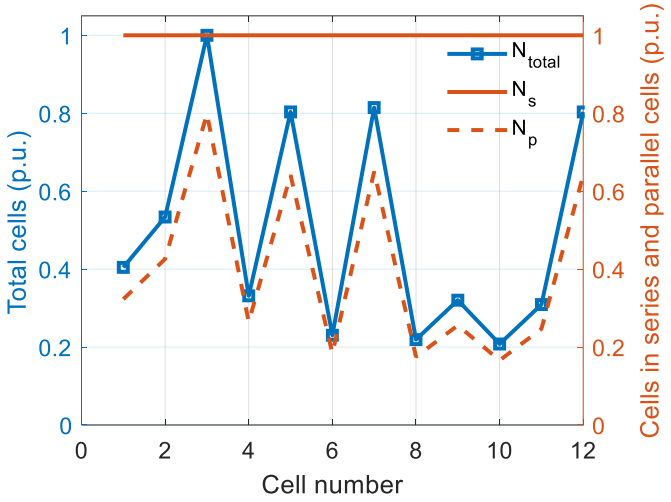

RTRC
Raytheon Technologies Research Center

Hybrid Energy Storage Module (HESM)

MODULAR, SCALABLE ENERGY STORAGE

- Bi-directional, high kW converter + energy storage
- Integral charge, discharge, & safety controls
- Active power quality control / filtering of HVDC bus
- HVDC bus stable with pulse and regenerative loads

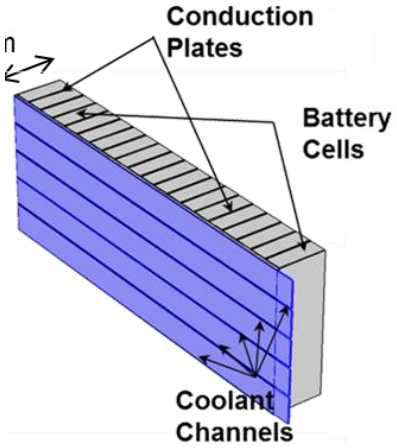

Battery Module

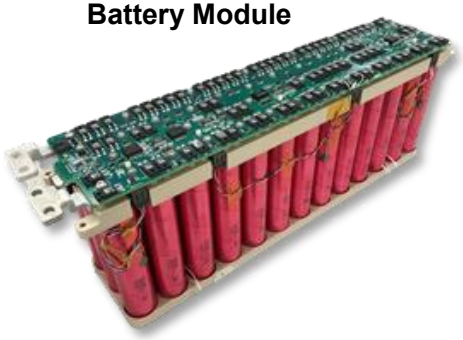

Capacitor Module



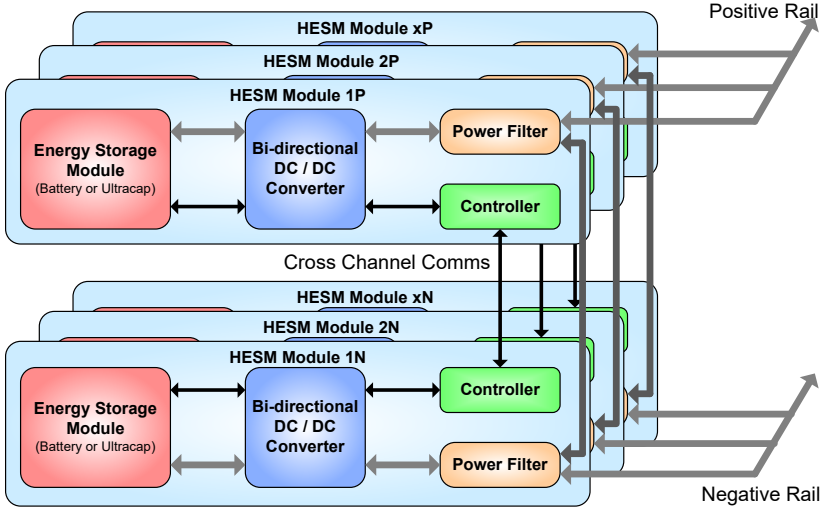

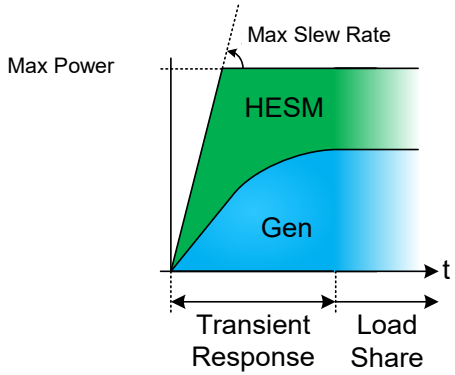

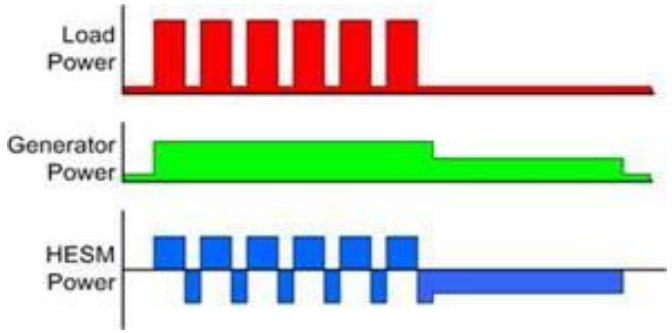

RTRC
Raytheon Technologies Research Center

Collins Aerospace

Thank you

Contact:

Baljit Riar
baljit.riar@rtx.com

Mike Futrell
mike.futrell@collins.com